GUIDE TO CHANCE® MODEL SPECIFICATIONS

Title	Revision Date	Click to Download Word Doc	PDF Page
Helical Pile Foundations	10/2020	Download	Page 2
Helical Pulldown® Micropiles	2018	Download	Page 31
Helical Tieback Anchors	8/2014	Download	Page 67
Helical Pier Foundation System Installation for Remedial Applications	6/2005	Download	Page 96
Atlas 2-Piece Systems	10/2006	Download	Page 103
Atlas 2-Piece Systems with Integrated Tieback Anchor and Reaction Plate for Lateral Capacity	10/2006	Download	Page 118
Instant Foundations (Streetlight or other wired pole base)	2023	Download	Page 130
Square Shaft Guy Anchors	2021	Download	Page 134
GroutForce Screw Displacement Pile	6/2025	Download	Page 146

GUIDE TO MODEL SPECIFICATION – CHANCE® Civil Construction HELICAL PILES FOR STRUCTURAL SUPPORT

TYPES OF SPECIFICATIONS

The three types of specifications that are used for Helical Pile projects are:

Open Specifications: The Contractor is given the responsibility for the scope and design of the Helical Pile installation. In addition, the construction, capacity, and performance of the Helical Pile are the sole responsibility of the Contractor. This specification assumes that the Owner or Designer has provided the required structural loads. This specification type is most common for securing bids on temporary projects, and is not recommended for permanent applications.

Performance Specifications: The Contractor is given the responsibility for certain design and/or construction procedures, but must demonstrate to the Owner through testing and/or mutually agreed upon acceptance criteria that the production Helical Piles meet or exceed the specified performance parameters. This specification assumes that the location and the required loads of the Helical Pile have been specified. The Contractor and Owner share the responsibility for the work.

Prescriptive Specifications: The Owner has the sole responsibility for the scope and design of the Helical Pile installation and specifies the procedures that must be followed. Prescriptive specifications mandate the Owner to be responsible for the proper performance of the Helical Piles. The Contractor is responsible for fulfilling the obligations/details as specified in the construction documents.

Performance specifications are the most common and allow Contractors to use their unique installation methods and experience for any given site conditions. Owners receive the benefit of value engineering, which can result in lower costs.

The Owner, Designer, and Contractor will be jointly responsible for the design, installation, acceptance, and performance of Helical Piles. The installation of a Helical Pile requires specialized equipment, techniques, and trained work crews. Every detail of the work cannot be specified, and every potential problem cannot be

©Copyright 2020 Hubbell, Inc.

anticipated. Therefore, a contractor trained in the proper methods of design and installation of Helical Piles must be selected.

A list of the major tasks to be performed on a Helical Pile project is shown in Table-1 of the Model Specifications. The Owner or his representative should select the type of specification and procurement method. The responsible party for each task must be identified and mutually agreed upon at the earliest point in the contracting process. The completed Table-1 should be included in the construction documents. The process of continuous communication between all the parties involved is essential to achieve a satisfactory result. Clear communication and close cooperation are particularly important in the start-up phase and in testing. In addition, a timely preparation and review of all submittals is critical.

This model specification can be adapted to each of the three types of specifications. However, it is primarily written for the performance type. The identity of the "Contractor" and the "Owner" is always well defined, unlike that of the "Designer" or "Engineer". For example, the "Engineer" may be an employee(s) of the Contractor, or a third-party consultant hired to secure a lower cost alternative during the bidding process. In contrast, the "Engineer" may be the Owner, an employee(s) of the Owner, or a representative hired by the Owner. It is recommended that the Engineer be a third-party agency employed by the Owner to serve in the owner's best interests during the various stages of the contract.

For purposes of this Model Specification, the subject is a high capacity Helical Pile manufactured by CHANCE® Civil Construction. At present, maximum working or design loads range between 12.5 and 50 tons. The Helical Pile consists of one or more helical bearing plates attached at the tip of a high strength central steel shaft. The central steel shaft consists of either a solid square shaft of various sizes, or hollow pipe shaft of various diameters and wall thickness. The steel shafts are typically 1-1/2" to 8 inches in diameter and will accept load directly axially and/or laterally to provide structural support.

It is suggested that the specification writer accurately and completely modify this model to suit his/her particular case.

Items in italics as such may be considered as "Commentary" and as such may be deleted or retained to suit the needs of the specification writer.

©Copyright 2020 Hubbell, Inc.

The following is list of general references that will provide additional background to Helical Pile technology:

Goen, J. Lee, *Compression Load on HELICAL PIER® Foundation Systems Anchors – Design and Construction*, Bulletin 01-9304, Copyright 1998 Hubbell/Chance, 210 North Allen St., Centralia, MO 65240

Hargrave, R. L. and Thorsten, R. E., 1992. Helical Piers in Expansive Soils of Dallas, Texas. *Proceedings 7th International Conference on Expansive Soils, Session 24*, Bulletin 01-9311, Copyright 1993 A. B. Chance, 210 North Allen St., Centralia, MO 65240

Hoyt, R.M. and Clemence, S.P., 1989. Uplift Capacity of Helical Anchors in Soil. *Proceedings of the 12th International Conference on Soil Mechanics and Foundation Engineering*, Vol. 2, pp. 1019-1022.

Hubbell Power Systems, Inc., Technical Design Manual – 4th Edition, Copyright 2018, Hubbell Inc., 210 North Allen St., Centralia, MO 65240

"ICC-ES ESR-2794", Reissued April 2019, ICC Evaluation Service, Inc., Brea, CA 92821

Lutenegger, Alan J., Gary L. Seider, "Profiling Subsurface Stratigraphy Using Torque Measurements from Installation of a Helical Plate", Proceedings, ISC'4, Fourth International Conference on Geotechnical and Geophysical Site Characterization, September 18 – 21, 2012 Porto de Galinhas, Pernambuco, Brazil.

Pack, J. S., 2000. Design of Helical Piles for Heavily Loaded Structures. *New Technological and Design Developments in Deep Foundations*, ASCE Geotechnical Special Publication, pp. 353- 367.

Seider, Gary L., "*Versatile Steel Screw Anchors*", Structural Engineer Magazine, March 2000; Volume 1, Number 2, ppgs. 42-46.

Seider, Gary L. (2015), "Bearing and Friction Design Capacity Software for Helical Anchors and Piles", Proceedings, The 2015 International Foundations Congress & Equipment Exposition (IFCEE), San Antonio, TX

Wesolek, Dana A., Schmednecht, Fred C., and Seider, Gary L. "Helical Piers/Anchors in the Chicago Building Code", Proceedings of the DFI 30th Annual Conference on Deep Foundations, Chicago, IL pp. 193-204.

©Copyright 2020 Hubbell, Inc.

CHANCE® Civil Construction
HELICAL PILES

MODEL SPECIFICATION

1. GENERAL

1.1 Purpose of Specification

The purpose of this specification is to detail the furnishing of all designs, materials, tools, equipment, labor and supervision, and installation techniques necessary to install Helical Piles as detailed on the drawings, including connection details. This shall include provisions for load testing that may be part of the scope of work

Specifier Note: This specification may require modification to account for unusual and/or unforeseen site and subsurface conditions and the particular circumstances of the project.

1.2 Scope of Work

This work consists of furnishing all necessary engineering and design services (if required), supervision, labor, tools, materials, and equipment to perform all work necessary to install the Helical Piles, at (location, City, State/Province) for (Company, State or Private Authority) per the specifications described herein, and as shown on the drawings. The Contractor shall install a Helical Pile that will develop the load capacities as detailed on the drawings. This may also include provisions for load testing to verify Helical Pile capacity and deflection, if part of the scope of work. The responsibilities and duties of the respective parties for this project are summarized in Table-1.

©Copyright 2020 Hubbell, Inc.

Table-1. Tasks and Responsibilities to be Allocated for Helical Pile Work

TASK		RESPONSIBLE PARTY*
1	Site Investigation, Geotechnical Investigation, Site Survey, and potential work restrictions	
2	Type of specification, requirement for a pre-contract testing program, and procurement method	
3	Obtaining easements	
4	Overall scope of work, design of the Helical Pile structure – including design loads (vertical, horizontal, etc.), pile locations, and pile spacing and orientation	
5	Definition and qualification of safety factors	
6	Calculation/estimation of allowable structural and/or Helical Pile movement in service (acceptance criteria)	
7	Definition of service life (temporary – months or permanent - years) and required degree of corrosion protection based on site conditions	
8	Type and number of tests (pre-contract, pre-production and production)	
9	Minimum total Helical Pile length, depth to bearing stratum	
10	Helical Pile components and details	
11	Details of corrosion protection, if required	
12	Details of pile connection to structure (e.g., for static and seismic conditions)	
13	Preparation of Drawings and test reports	
14	Evaluation of test results	
15	Construction methods, schedule, sequencing, and coordination of work	
16	Requirements of field production control, including logging of installation torque vs. installed depth	
17	Supervision of work	
18	Long-term monitoring	

* To be filled in by specification writer.

1.3 Qualifications of the Helical Pile Contractor

The Helical Pile Contractor shall be experienced in performing design and construction of Helical Piles and shall furnish all materials, labor, and supervision to perform the work. The Contractor shall be trained and authorized by Hubbell Power Systems, Inc. in the proper methods of design and installation of Helical Piles. The Contractor shall provide names of on-site personnel materially involved with the work, including those who carry documented certification from Hubbell Power Systems, Inc. At a minimum, these personnel shall include foreman, machine operator, and project engineer/manager.

The Helical Pile Contractor shall not sublet the whole or any part of the contract without the express written permission of the Owner.

 ©Copyright 2020 Hubbell, Inc.

1.4 Related Project Specifications

To be determined by the specification writer.

1.5 Definitions

A partial list follows. *The Owner may wish to add other specific, project-related items.*

Contractor: The person/firm responsible for performing the Helical Pile work.

Coupling: Central steel shaft connection means formed as integral part of the plain extension shaft material. For Type SS & RS Helical Piles, couplings are internal or external sleeves, or hot upset forged sockets.

Coupling Bolt(s): High strength, structural steel fasteners used to connect Helical Pile segments together. For Type SS segments, the coupling bolt transfers axial load. For Type RS segments, the coupling bolts transfer both axial and torsional forces.

Helical Extension: Helical Pile foundation component installed immediately following the lead or starter section, if required. This component consists of one or more helical plates welded to a central steel shaft of finite length. Function is to increase bearing area.

Helix Plate: Generally round steel plate formed into a ramped spiral. The helical shape provides the means to install the helical pile, plus the plate transfers load to soil in end bearing. Helix plates are available in various diameters and thickness.

HELICAL PULLDOWN® Micropile: A small diameter, soil displacement, cast-in-place Helical Pile, in which most of the applied load is resisted by the central steel shaft and steel reinforcement, if installed. Load transfer to soil is both end bearing and friction. United States Patent 5,707,180, Method and Apparatus for Forming Piles In-Situ. A.k.a. HPM.

Helical Pile: A bearing type foundation element consisting of a lead or starter section, helical extension (if so required by site conditions), plain extension section(s), and a pile cap. A.k.a. helical screw pile, screw pile, helical screw foundation.

Installation Torque(T): The resistance generated by a Helical Pile when installed into soil. The installation resistance is a function of the soil type, and size and shape of the various components of the Helical Pile.

Lead Section: The first Helical Pile foundation component installed into the soil, consisting of single or multiple helix plates welded to a central steel shaft. A.k.a. Starter Section.

Pile Cap: Connection means by which structural loads are transferred to the Helical Pile. The type of connection varies depending upon the requirements of the project and type of Helical Pile material used.

©Copyright 2020 Hubbell, Inc.

Round Shaft (RS): **R**ound steel pipe central **S**haft elements ranging in diameter from 2-7/8" to 10". A.k.a. Hollow Shaft (Type HS), Type T/C, Type PIF.

Plain Extension: Central steel shaft segment without helix plates. It is installed following the installation of the lead section or helical extension (if used). The segments are connected with integral couplings and bolts. Plain extensions are used to extend the helix plates beyond the specified minimum depth and into competent load bearing stratum.

Safety Factor: The ratio of the ultimate capacity to the working or design load used for the design of any structural element.

Square Shaft (SS): Solid steel, round-cornered-**S**quare central **S**haft elements ranging in size from 1-1/4" to 2-1/4". A.k.a. Type SQ.

Torque Strength Rating: The maximum torque energy that can be applied to the helical pile foundation during installation in soil, a.k.a. allowable, or safe torque.

1.6 Allowable Tolerances

The tolerances quoted in this section are suggested maximums. The actual values established for a particular project will depend on the structural application.

1.6.1 Centerline of Helical Piles shall not be more than 3 inches from indicated plan location.

1.6.2 Helical Pile plumbness shall be within 2° of design alignment.

1.6.3 Top elevation of Helical Pile shall be within +1 inch to –2 inches of the design vertical elevation.

1.7 Quality Assurance

1.7.1 Helical Piles shall be installed by authorized Hubbell Power Systems, Inc. Contractor. These Contractors shall have satisfied the requirements relative to the technical aspects of the product and installation procedures as therein specified. Authorization documents shall be provided upon request to the Owner or their representative.

1.7.2 The Contractor shall employ an adequate number of skilled workers who are experienced in the necessary crafts and who are familiar with the specified requirements and methods needed for proper performance of the work of this specification.

1.7.3 All Helical Piles shall be installed in the presence of a designated representative of the Owner unless said representative informs the Contractor otherwise. The designated representative shall have the right of access to any and all field installation records and test reports.

©Copyright 2020 Hubbell, Inc.

1.7.4 Helical Pile components as specified therein shall be manufactured by a facility whose quality systems comply with ISO (International Organization of Standards) 9001 requirements. Certificates of Registration denoting ISO Standards Number shall be presented upon request to the Owner or their representative.

1.7.5 Hubbell Power Systems, Inc. provides a 30-year Peace of Mind warranty on materials and workmanship of the product installed by a certified contractor. Any additional warranty provided by the Contractor shall be issued as an addendum to this specification.

1.7.6 Design of Helical Piles shall be performed by an entity as required in accordance with existing local code requirements or established local practices. This design work may be performed by a licensed professional Engineer, an authorized Hubbell Power Systems, Inc. Contractor, or Designer depending upon local requirements or practices.

1.8 Design Criteria

1.8.1 Helical Piles shall be designed to meet the specified loads and acceptance criteria as shown on the drawings. The calculations and drawings required from the Contractor or Engineer shall be submitted to the Owner for review and acceptance in accordance to Section 3.1 "Construction Submittals".

1.8.2 The allowable working load on the Helical Piles shall not exceed the following mechanical strength values:

1.8.2.1 For compression loads:

$$P_{allowc} = 0.6 * f_{yshaft} * A_{shaft}$$

Where: P_{allowc} = allowable working load in compression (kip)
f_{yshaft} = minimum yield strength of central steel shaft (ksi)
A_{shaft} = area of central steel shaft (with corrosion allowance if required) (in.^{2})

The minimum yield strength of the central steel shaft is as follows: Type SS5: 70 ksi; Type SS125, SS150, SS175, SS200, SS225: 90 ksi; Type RS2875, RS3500, RS4500: 50 ksi.

The allowable working loads may be reduced by the allowable load capacity per helix plate(s) and the allowable load capacity based on soil type and pile-head end condition. It is recommended to use the allowable load capacities per helical pile type as published by Hubbell Power Systems, Inc. (shown in Section 7 of the Technical Design Manual – 4th Edition).

1.8.2.2 For tension loads:

$$P_{allowt} = S_{ut} / FS$$

©Copyright 2020 Hubbell, Inc.

Where: P_{allowt} = allowable working load in tension (kip)
S_{ut} = Min. ultimate tensile strength of central steel shaft segment (at coupling joint) (kip)
FS = factor of safety suitable for application, i.e. temporary or permanent structures

For permanent applications, it is recommended to use a factor of safety of two (2). For temporary applications, factor of safety typically ranges between 1.25 and 1.5.

The tension strength may be reduced by the ultimate strength per helix plate(s) – depending on the number of helix plates specified and type of shaft family used. The ultimate tension strength may also be reduced by the torque correlated capacity – depending on the type of shaft family used. It is recommended to use the tension strengths as published by Hubbell Power Systems, Inc. (shown in Section 7 of the Technical Design Manual – 4th Edition)

1.8.3 Except where noted otherwise on the project plans, all helical piles shall be designed and installed to provide a minimum safety factor for ultimate applied load of _____ (2.0 typical), and a maximum axial displacement at working load of _____ (1 inch [25 mm] typical). The Owner shall determine the allowable response to axial loads based on serviceability requirements.

1.8.4 Helical Pile capacity in soil shall not be relied upon from the following soil layers as defined in the geotechnical reports:

_____

_____

The overall length and installed torque of a Helical Pile shall be specified such that the required in-soil capacity is developed by end-bearing on the helix plate(s) in an appropriate strata(s).

It is recommended that the theoretical end-bearing capacity of the helix plates be determined using HeliCAP® Engineering Software or equal commercially available software. The required soil parameters (c, ϕ, γ, or N-values) for use with HeliCAP® or equal shall be provided in the geotechnical reports.

Helical Piles are not suited for solid, competent rock, but the helix plates can penetrate into dense bearing soils. It is recommended that Helical Piles be installed to a specified minimum torque and depth to ensure the helical plates are terminated in bearing soils. Appropriate and repeatable installation techniques and Helical Pile termination criteria must be identified and verified in the field.

1.8.5 Lateral Load and Bending: Where Helical Piles are subjected to lateral or base shear loads as indicated on the plans, the bending moment from said loads shall be determined using lateral load analysis program such as LPILE or equal commercially available software. The required soil parameters (c, ϕ, γ, and k_s) for use with LPILE or equal shall be provided in the geotechnical reports. The Owner shall determine the allowable response to lateral loads based on serviceability

©Copyright 2020 Hubbell, Inc.

requirements. The combined bending and axial load factor of safety of the Helical Pile shall be as determined by the Owner.

CHANCE® Helical Piles are slender foundation elements, i.e. the shafts range from 1-1/4" to 4-1/2" in diameter. As such, vertically installed Helical Piles generally require enlarged shaft sections or pile caps to adequately resist lateral load. The lateral load analysis as detailed in Section 1.8.5 of the specification can be used to determine the required diameter and length of the enlarged shaft section or pile cap.

It is recommended to list below each load combination and required factor of safety for this specific project.

1.8.6 Critical Buckling Load: Where Helical Piles are installed into low strength soil, the critical buckling load shall be determined using lateral load analysis program such as LPILE or equal commercially available software, or various other methods. The required soil parameters (c, ϕ, γ, and k_s) for use with LPILE or equal shall be provided in the geotechnical reports.

Research shows that buckling, either elastic or nonelastic, is of practical concern only for long Helical Pile shafts in the softest soils. This is in agreement with past findings regarding conventional pile foundations.

1.8.7 Down-Drag/Negative Skin Friction: Type SS and Type RS Helical Piles are slender shaft foundation elements and are not practically affected by down-drag/negative skin friction. If Helical Piles with central steel shafts >4" in diameter are used in areas where compressible or decomposing soils overlie bearing stratum, or where expansive or frozen soils can cause pile jacking, Helical Pile shafts should be provided with a no-bond zone along a specified length to prevent load transfer that may adversely affect pile capacity. Alternately, Helical Piles can be provided with sufficient axial load capacity to resist down drag/negative skin friction forces.

1.8.8 The Helical Pile attachment (pile cap) shall distribute the design load (DL) to the concrete foundation such that the concrete bearing stress does not exceed those in the ACI Building Code and the stresses in the steel plates/welds does not exceed AISC allowable stresses for steel members.

1.8.9 Corrosion Protection

This section is optional (see below). Provisions of this section and Section 4.7 below may not be required in the Specification. If this section is not used, then Section 4.7 should likewise be deleted. The degree and extent of corrosion protection must be specified by the Owner (Table-1).

Corrosion protection is a function of structure type, service life, and the overall aggressiveness of the project soils. The need for corrosion protection of Helical Piles must be carefully determined and specified as necessary.

©Copyright 2020 Hubbell, Inc.

Corrosion resistant coatings (i.e. epoxy, plastic sheath or tape coatings) on the lead/starter section are impractical due to abrasive action wearing off the coating as the soil flows over the helix plates and around the central steel shaft. Hot dip galvanization is the only practical means to provide a corrosion resistant coating capable of withstanding the rigors of installation. Extension sections are typically hot-dip galvanized, but other coatings can be specified.

The following requirements are typical. The specifier should review and edit as appropriate for the project.

Structure Type: _____ (e.g. temporary, permanent*) with a temporary structure being defined within a specified time frame (i.e. months rather than years). In general, permanent structures have a service life greater than 24 months.*

Temporary structures do not require corrosion protection.

Service Life: _____(years) *a typical service life of 50 years should be used unless otherwise specified. If the service life of a temporary Helical Pile is likely to be extended due to construction delays, it should be considered permanent.*

For a service life of less than 20 years in non-aggressive soil, corrosion protection is not recommended.

Corrosion protection requirements for the various Helical Pile elements shall be provided meeting the requirements of Table-1 in the Appendix for:

Soil: _____ Aggressive or Non-Aggressive *with optional location and elevation limits defined by the Specifier.*

For guidance on aggressiveness classification, see Table-1 in the Appendix. It is recommended to retain the services of a corrosion design professional for very aggressive soils.

TABLE-2

CORROSION PROTECTION				
LOADING	**TENSION**		**COMPRESSION**	
SOIL	**AGGRESSIVE[1]**	**NON-AGGRESSIVE**	**AGGRESSIVE[1]**	**NON-AGGRESSIVE**
CENTRAL STEEL SHAFT (Lead Section)	a. Galvanization OR b. Minimum 1/8" corrosion loss on outside	a. Bare steel OR b. Galvanization OR c. Minimum 1/8" corrosion loss on outside	a. Galvanization OR b. Minimum 1/8" corrosion loss on outside	a. Bare steel OR b. Galvanization OR c. Minimum 1/8" corrosion loss on outside

©Copyright 2020 Hubbell, Inc.

CENTRAL STEEL SHAFT (Extension Section)	a. Galvanization OR b. Epoxy coating OR c. Tapecoat® d. a., b. or c. + Grout cover[2] The Specifier may elect to use a grout case.	a. Bare steel OR b. Galvanization OR c. Epoxy coating d. Tapecoat®	a. Galvanization OR b. Epoxy coating OR c. Tapecoat® d. a., b. or c. + Grout cover[2] The Specifier may elect to use a grout case.	a. Bare steel OR b. Galvanization OR c. Epoxy coating d. Tapecoat®
STEEL PILE CAP	a. Galvanization OR b. Epoxy coating	e. Bare steel OR f. Galvanization OR g. Epoxy coating	c. Galvanization OR d. Epoxy coating	h. Bare steel OR i. Galvanization OR j. Epoxy coating

NOTES:
Lettered items are options.
For guidance on aggressiveness classification, see Table-2 of the Appendix.

1. Corrosion protection shall extend 15'-0 below corrosive material.
2. Minimum 1" in soil. If protective coatings (galvanization, epoxy) are provided in compression, minimum cover may be 0.25" in soil. Grout column can be installed using the patented HELICAL PULLDOWN® Micropile method.

The most critical area to protect from corrosion is at or near the ground line – if the surficial soils have been disturbed. Undisturbed soils are deficient in oxygen a few feet below ground line or below the water table zone. Undisturbed soils typically result in steel piling not being appreciably affected by corrosion.

1.9. Ground Conditions

The Geotechnical Report, including logs of soil borings as shown on the boring location plan, shall be considered to be representative of the in-situ subsurface conditions likely to be encountered on the project site. Said Geotechnical Report shall be the used as the basis for Helical Pile design using generally accepted engineering judgement and methods.

If soil borings are not available, it is suggested to install a Helical Pile at various locations on the project site. Using the well-known installed torque vs. capacity attribute of helical piles, a presumptive soil profile can be generated.

The Geotechnical Report shall be provided for purposes of bidding. If during Helical Pile installation, subsurface conditions of a type and location are encountered of a frequency that were not reported, inferred and/or expected at the time of preparation of the bid, the additional costs required to overcome such conditions shall be considered as extras to be paid for.

©Copyright 2020 Hubbell, Inc.

All available information related to subsurface and general site conditions should be made available to all bidders at the time of bid preparation. It is not reasonable to expect bidders to conduct supplemental site investigations at their own risk and cost prior to bidding, unless the specific contract requirements call for it (Table-1) and provide for appropriate compensation. A mandatory site visit and pre-bid meeting should be held so that the details of the project and the specifications can be thoroughly discussed. These steps will help avoid technical and contractual problems developing during the execution of the work, and will help all parties manage their respective risk.

2 REFERENCED CODES AND STANDARDS

Standards listed by reference, including revisions by issuing authority, form a part of this specification section to the extent indicated. Standards listed are identified by issuing authority, authority abbreviation, designation number, title, or other designation established by issuing authority. Standards subsequently referenced herein are referred to by issuing authority abbreviation and standard designation. In case of conflict, the particular requirements of this specification shall prevail. The latest publication as of the issue of this specification shall govern, unless indicated otherwise.

2.1 American Society for Testing and Materials (ASTM):

2.1.1 ASTM A29/A29M Steel Bars, Carbon and Alloy, Hot-Wrought and Cold Finished.
2.1.2 ASTM A36/A36M Structural Steel.
2.1.3 ASTM A53 Pipe, Steel, Black and Hot-Dipped, Zinc-Coated Welded and Seamless.
2.1.4 ASTM A153 Zinc Coating (Hot Dip) on Iron and Steel Hardware.
2.1.5 ASTM A252 Welded and Seamless Steel Pipe Piles.
2.1.6 ASTM A775 Electrostatic Epoxy Coating
2.1.7 ASTM A193/A193M Alloy-Steel and Stainless Steel Bolting Materials for High Temperature Service.
2.1.8 ASTM A320/A320M Alloy-Steel Bolting Materials for Low Temperature Service.
2.1.9 ASTM A325 Standard Specification for Structural Bolts, Steel, Heat Treated, 120/105 ksi Minimum Tensile Strength.
2.1.10 ASTM A500 Cold-Formed Welded and Seamless Carbon Steel Structural Tubing in Rounds and Shapes.
2.1.11 ASTM A513 Standard Specification for Electric Resistance Welded Carbon and Alloy Steel Mechanical Tubing.
2.1.12 ASTM A536 Standard Specifications for Ductile Iron Castings
2.1.13 ASTM A572 HSLA Columbium-Vanadium Steels of Structural Quality.
2.1.14 ASTM A618 Hot-Formed Welded and Seamless High-Strength Low-Alloy Structural Tubing.
2.1.15 ASTM A656 Hot-Rolled Structural Steel, High-Strength Low-Alloy Plate with Improved Formability.
2.1.16 ASTM A958 Standard Specification for Steel Castings, Carbon, and Alloy, with Tensile Requirements, Chemical Requirements Similar to Wrought Grades.
2.1.17 ASTM A1018 Steel, Sheet and Strip, Heavy Thickness Coils, Hot Rolled, Carbon, Structural, High-Strength Low-Alloy, Columbium or Vanadium, and High-Strength Low-Alloy with Improved Formability.

©Copyright 2020 Hubbell, Inc.

2.1.18 ASTM D1143 Method of Testing Piles Under Static Axial Compressive Load.
2.1.19 ASTM D3689 Method of Testing Individual Piles Under Static Axial Tensile Load.

2.2 American Welding Society (AWS):
2.2.1 AWS D1.1 Structural Welding Code – Steel.
2.2.2 AWS D1.2 Structural Welding Code – Reinforcing Steel.

2.3 American Society of Civil Engineers (ASCE):
2.3.1 ASCE 20-96 Standard Guidelines for the Design and Installation of Pile Foundations.

2.4 Deep Foundations Institute (DFI):
2.4.1 *Guide to Drafting a Specification for High Capacity Drilled and Grouted Micropiles for Structural Support*, 1st Edition, Copyright 2001 by the Deep Foundation Institute (DFI).
2.4.2 *Model Specification – Helical Anchor Foundations- Tension Applications,* 1st Edition, Copyright 2014 by the Deep Foundations Institute(DFI).

2.5 Society of Automotive Engineers (SAE):
2.5.1 SAE J429 Mechanical and Material Requirements for Externally Threaded Fasteners.

3 SUBMITTALS

3.1 Construction Submittals

3.1.1 The Contractor or Engineer shall prepare and submit to the Owner, for review and approval, working drawings and design calculations for the Helical Piles intended for use at least 14 calendar days prior to planned start of construction (but note also Paragraph 3.1.8). All submittals shall be signed and sealed by a Registered Professional Engineer currently licensed in the State/Province of _____.

3.1.2 The Contractor shall submit a detailed description of the construction procedures proposed for use to the Owner for review. This shall include a list of major equipment to be used.

3.1.3 The Working Drawings shall include the following:

3.1.3.a Helical Pile number, location and pattern by assigned identification number
3.1.3.b Helical Pile design load and required safety factor
3.1.3.c Type and <u>minimum</u> size of central steel shaft

Type SS125 1-1/4" RCS, SS5/SS150 – 1-1/2" RCS, Type SS175 – 1-3/4" RCS, Type SS200 – 2" RCS, Type SS225 – 2-1/4" RCS, Type RS2875 – 2-7/8" OD, Type RS3500 – 3-1/2" OD Pipe, Type RS4500 – 4-1/2" OD Pipe.

3.1.3.d <u>Minimum</u> number of helix plates
3.1.3.e <u>Minimum</u> effective installation torque (optional)

©Copyright 2020 Hubbell, Inc.

It is recommended to specify either the design load and required safety factor (3.1.3.b) or the minimum effective installation torque (3.1.3.e)

3.1.3.f Minimum overall depth
3.1.3.g Inclination angle of Helical Pile
3.1.3.h Cut-off elevation
3.1.3.i Helical Pile attachment to structure relative to grade beam, column pad, pile cap, etc.

If the minimum number of helix plates and minimum overall depth for the Helical Piles is not shown on the Working Drawings, the Contractor shall have the option of performing subsurface tests using methods subject to the review and acceptance of the Owner. The data collected along with other information pertinent to the project site shall be used to determine the required helix configuration and overall depth.

3.1.4 The Contractor shall submit shop drawings for all Helical Pile components, including corrosion protection and pile top attachment to the Owner for review and approval. This includes Helical Pile lead/starter and extension section identification (manufacturer's catalog numbers).

Shop drawings for Helical Pile components, including pile top attachments, can be obtained from CHANCE Civil Construction, their certified Distributors and Installing Contractors, or directly from https://www.hubbell.com/chancefoundationsolutions/en.

3.1.5 If required, the Contractor shall submit certified mill test reports for the central steel shaft, as the material is delivered, to the Owner for record purposes. The ultimate strength, yield strength, % elongation, and chemistry composition shall be provided.

3.1.6 The Contractor shall submit plans for pre-production (optional) and production testing for the Helical Piles to the Owner for review and acceptance prior to beginning load tests. The purpose of the test is to determine the load versus displacement response of the Helical Pile and provide an estimation of ultimate capacity.

It is the responsibility of the structural engineer of record to establish acceptance criteria for Helical Pile verification tests, which can be incorporated into the project specific specification. Load testing also provides the means to verify the empirical ratio between the ultimate capacity and the average installing torque of the Helical Pile for a specific project site.

3.1.7 The Contractor shall submit to the Owner copies of calibration reports for each torque indicator or torque motor, and all load test equipment to be used on the project. The calibration tests shall have been performed within 6 months of the date submitted. Helical Pile installation and testing shall not proceed until the Owner has received the calibration reports. These calibration reports shall include, but are not limited to, the following information:

3.1.7.a Name of project and Contractor
3.1.7.b Name of testing agency
3.1.7.c Identification (serial number) of device calibrated

©Copyright 2020 Hubbell, Inc.

3.1.7.d Description of calibrated testing equipment
3.1.7.e Date of calibration
3.1.7.f Calibration data

Load test equipment includes load cylinders, pressure gauges, and load transducers. Chance Digital Torque Indicator (SKU C3031836) is calibrated at the factory prior to shipment.

3.1.8 Work shall not begin until all the submittals have been received and approved by the Owner. The Contractor shall allow the Owner a reasonable time to review, comment, and return the submittal package after a complete set has been received. All costs associated with incomplete or unacceptable submittals shall be the responsibility of the Contractor.

3.2 Installation Records

The Contractor shall provide the Owner copies of Helical Pile installation records within 24 hours after each installation is completed. Records shall be prepared in accordance with the specified division of responsibilities as noted in Table-1. Formal copies shall be submitted on a weekly basis. These installation records shall include, but are not limited to, the following information.

3.2.1 Name of project and Contractor
3.2.2 Name of Contractor's supervisor during installation
3.2.3 Date and time of installation
3.2.4 Name and model of installation equipment
3.2.5 Type of torque indicator used
3.2.6 Location of Helical Pile by assigned identification number
3.2.7 Actual Helical Pile type and configuration – including lead section (number and size of helix plates), number and type of extension sections (manufacturer's SKU numbers)
3.2.8 Helical Pile installation duration and observations
3.2.9 Total length of installed Helical Pile
3.2.10 Cut-off elevation
3.2.11 Inclination of Helical Pile
3.2.12 Installation torque at one-foot intervals for the final 10 feet
3.2.13 Comments pertaining to interruptions, obstructions, or other relevant information
3.2.14 Rated load capacities

3.3 Test Reports

The Contractor shall provide the Owner copies of field test reports within 24 hours after completion of the load tests. Records shall be prepared in accordance with the specified division of responsibilities as noted in Table-1. Formal copies shall be submitted within a reasonable amount of time following test completion. These test reports shall include, but are not limited to, the following information (note Section 6 – Helical Pile Load Tests).

3.3.1 Name of project and Contractor

©Copyright 2020 Hubbell, Inc.

3.3.2 Name of Contractor's supervisor during installation
3.3.3 Name of third party test agency, if required
3.3.4 Date, time, and duration of test
3.3.5 Location of Helical Pile by assigned identification number
3.3.6 Type of test (i.e. tension or compression)
3.3.7 Description of calibrated testing equipment and test set-up
3.3.8 Actual Helical Pile type and configuration – including lead section, number and type of extension sections (manufacturer's SKU numbers)
3.3.9 Steps and duration of each load increment
3.3.10 Cumulative pile-head movement at each load step
3.3.11 Comments pertaining to test procedure, equipment adjustments, or other relevant information
3.3.12 Signed by third party test agency rep., registered professional engineer, or as required by local jurisdiction

3.4 Closeout Submittals

3.4.1 Warranty: Warranty documents specified herein
3.4.1.a Project Warranty: Refer to Conditions of the Contract for project warranty provisions

Coordinate the warranty period stated herein with the project warranty as stated in the Contract documents.

Warranty Period: (*Specify Term*) years commencing on date of Substantial Completion

3.4.1.b Manufacturer's Warranty: Submit, for Owner's Acceptance, manufacturer's standard warranty document executed by authorized company official. Manufacturer's warranty is in addition to, and not a limitation of, other rights the Owner may have under Contract Document.

4 PRODUCTS AND MATERIALS

4.1 Central Steel Shaft:

The central steel shaft, consisting of lead sections, helical extensions, and plain extensions, shall be Type SS (Square Shaft) or RS (Round Shaft) or a combination of the two (SS to RS Combo Pile) as manufactured by Hubbell Power Systems, Inc.(Centralia, MO).

4.1.1 *SS5 1-1/2" Material*: Shall be hot rolled Round-Cornered-Square (RCS) solid steel bars meeting dimensional and workmanship requirements of ASTM A29. The bar shall be modified medium carbon steel grade (similar to AISI 1044) with improved strength due to fine grain size.

4.1.1.a Torque strength rating = 5,700 ft-lb
4.1.1.b Minimum yield strength = 70 ksi

 ©Copyright 2020 Hubbell, Inc.

4.1.2 *SS125 1-1/4"; SS150 1-1/2"; SS175 1-3/4; SS200 2"; SS225 2-1/4" Material*: Shall be hot rolled Round-Cornered-Square (RCS) solid steel bars meeting the dimensional and workmanship requirements of ASTM A29. The bar shall be High Strength Low Alloy (HSLA), low to medium carbon steel grade with improved strength due to fine grain size.

4.1.2.a Torque strength rating: SS125 = 4,000 ft-lb; SS150 = 7,000 ft-lb; SS175 = 10,500 ft-lb; SS200 = 16,000 ft-lb; SS225 = 21,000 ft-lb

4.1.2.b Minimum yield strength = 90 ksi

4.1.3 *Type RS2875 2-7/8" OD Material*: Structural steel tube or pipe, welded or seamless, in compliance with ASTM A500 or A513. Wall thickness is 0.203" or 0.276".

4.1.3.a Torque strength rating: RS2875.203 = 7,000 ft-lb, or 6,710 ft-lb for building code compliant products listed in ICC-ES ESR-794; RS2875.276 = 8,000 ft-lb, or 8,900 ft-lb for building code compliant products listed in ICC-ES ESR-794.

4.1.3.b Minimum yield strength = 50 ksi

4.1.4 *Type RS3500 3-1/2" OD Material*: Shall be structural steel tube or pipe, seamless or straight-seam welded, per ASTM A53, A252, ASTM A500, or ASTM A618. Wall thickness is 0.300" (schedule 80).

4.1.4.a Torque strength rating = 13,000 ft-lb; or 12,500 ft-lb for building code compliant products listed in ICC-ES ESR-794.

4.1.4.b Minimum yield strength = 50 ksi

4.1.5 *Type RS4500 4-1/2" OD Material*: Shall be structural steel tube or pipe, seamless or straight-seam welded, per ASTM A500 or A513. Wall thickness is 0.337" (schedule 80).

4.1.5.a Torque strength rating = 25,000 ft-lb or 24,320 ft-lb for building code compliant products listed in ICC-ES ESR-794.

4.1.5.b Minimum yield strength = 50 ksi

4.1.6 *SS5/150 to RS2875 Combo Pile Material*: Shall be Type SS5/150 and RS2875 material as described above with a cast ductile iron adapter per ASTM A536 for the transition from SS5/150 to RS2875.

4.1.7 *SS175 to RS2875 Combo Pile Material*: Shall be Type SS175 and RS2875 material as described above with a cast ductile iron adapter per ASTM A536 for the transition from SS175 to RS2875.

4.1.8 *SS175 to RS3500 Combo Pile Material*: Shall be Type SS175 and RS3500 material as described above with a cast ductile iron adapter per ASTM A536 for the transition from SS175 to RS3500.

4.1.9 *SS200/225 to RS4500 Combo Pile Material*: Shall be Type SS200/225 and RS4500 material as described above with a cast ductile iron adapter per ASTM A536 for the transition from SS200/225 to RS4500.

 ©Copyright 2020 Hubbell, Inc.

4.2 Helix Bearing Plate:

Shall be hot rolled carbon steel sheet, strip, or plate formed on matching metal dies to true helical shape and uniform pitch. Bearing plate material shall conform to the following ASTM specifications.

4.2.1 *SS5 Material*: Per ASTM A572, or A1018, or A656 with minimum yield strength of 50 ksi. Plate thickness is 3/8".
4.2.2 *SS125 and SS1375 Material*: Per ASTM A572 with minimum yield strength of 50 ksi. Plate thickness is 3/8" or ½".
4.2.3 *SS150 and SS175 Material*: Per ASTM A656 or A1018 with minimum yield strength of 80 ksi. Plate thickness is 3/8" or ½".
4.2.4 *SS200 and SS225 Material*: Per ASTM A656 or A1018 with minimum yield strength of 80 ksi. Plate thickness is ½".
4.2.5 *RS2875 Material*: Per ASTM A36, or A572, with minimum yield strength of 36 ksi. Plate thickness is 3/8" or ½".
4.2.6 *RS3500 Material*: Per ASTM A36, or A572, or A1018, or A656 depending on helix diameter, per the minimum yield strength requirements cited above. Plate thickness is 3/8" or ½".
4.2.7 *RS4500 Material*: Per ASTM A572 with minimum yield strength of 50 ksi. Plate thickness is ½".

4.3 Bolts:

The size and type of bolts used to connect the central steel shaft sections together shall conform to the following ASTM specifications.

4.3.1 *SS125 1-1/4" Material*: 5/8" diameter bolt per ASTM A325.
4.3.2 *SS5 and SS150 1-1/2" Material*: ¾" diameter bolt per ASTM A193 Grade B7 w/ cold weather prop.
4.3.3 *SS175 1-3/4" Material*: 7/8" diameter bolt per ASTM A193 Grade B7 w/ cold weather prop.
4.3.4 *SS200 2" Material*: 1-1/8" diameter bolt per ASTM A193 Grade B7.
4.3.5 *SS225 2-1/4" Material*: 1-1/4" diameter bolt per ASTM A193 Grade B7.
4.3.6 *RS2875 2-7/8" OD Material*: ¾" diameter bolts (2 per coupling) per SAE J429 Grade 5.
4.3.7 *RS3500 3-1/2" OD Material*: ¾" diameter bolts (3 per coupling) per SAE J429 Grade 5.
4.3.8 *RS4500 4-1/2" OD Material*: ¾" diameter bolts (4 per coupling) per SAE J429 Grade 8.

4.4 **Carbide Tip**: Propriety carbide "tooth" welded on pilot point of CHANCE Type Square Shaft (SS) central steel shaft lead sections. The tip shall extend beyond and below the surface on the lower extremity of the pilot point.

4.5 Couplings:

For type SS125, SS5, SS150, SS175, SS200, and SS225 material, the coupling shall be formed as an integral part of the plain and helical extension material as hot upset forged sockets.

For Type RS2875, RS3500, and RS4500 material, the couplings shall be formed as an integral part of the plain and helical extension material as cold upset expanded sockets, or as pipe sleeves welded to the

 ©Copyright 2020 Hubbell, Inc.

extension shaft. The welded steel sleeves can be either DOM tubing or ERW pipe shaft with holes for connecting shaft sections together.

4.6 Plates, Shapes, or Pile Caps:

Depending on the application, the pile cap shall be a welded assembly consisting of structural steel plates and shapes designed to fit the pile and transfer the applied load. Structural steel plates and shapes for HELICAL PILE top attachments shall conform to ASTM A36 or ASTM A572 Grade 50.

4.7 Corrosion Protection (Optional)

The corrosion protection requirements, if any, are identified in Section 1.8.9. The Specifier may elect to delete this section entirely if no corrosion protection materials are required such as for compression Helical Piles in non-aggressive ground.

4.7.1 Epoxy Coating: If used, the thickness of coating applied electrostatically to the central steel shaft shall be 7-12 mils. Epoxy coating shall be in accordance with ASTM A775. Bend test requirements are not required. Coupling bolts and nuts are not required to be epoxy coated.

4.7.2 Galvanization: If used, all Hubbell Power Systems, Inc./A. B. Chance Type SS material shall be hot-dipped galvanized in accordance with ASTM A153 after fabrication. All Hubbell Power Systems, Inc./A. B. Chance Type RS material shall be hot-dipped galvanized in accordance with ASTM A153 or A123 as specified after fabrication.

5 EXECUTION

5.1 Site Conditions

5.1.1 Prior to commencing Helical Pile installation, the Contractor shall inspect the work of all other trades and verify that all said work is completed to the point where Helical Piles may commence without restriction.

5.1.2 The Contractor shall verify that all Helical Piles may be installed in accordance with all pertinent codes and regulations regarding such items as underground obstructions, right-of-way limitations, utilities, etc.

5.1.3 In the event of a discrepancy, the Contractor shall notify the Owner. The Contractor shall not proceed with Helical Pile installation in areas of discrepancies until said discrepancies have been resolved. All costs associated with unresolved discrepancies shall be the responsibility of the Owner.

5.2 Installation Equipment

5.2.1 Shall be rotary type, hydraulic power driven torque motor with clockwise and counter-clockwise rotation capabilities. The torque motor shall be capable of continuous adjustment to revolutions per minute (RPM's) during installation. Percussion drilling equipment shall not be permitted. The

©Copyright 2020 Hubbell, Inc.

torque motor shall have torque capacity 15% greater than the torsional strength rating of the central steel shaft to be installed.

Helical Piles should be installed with high torque, low RPM torque motors, which allow the helical screw plates to advance with minimal soil disturbance.

5.2.2 Equipment shall be capable of applying adequate down pressure (crowd) and torque simultaneously to suit project soil conditions and load requirements. The equipment shall be capable of continuous position adjustment to maintain proper Helical Pile alignment.

5.3 Installation Tooling

5.3.1 Shall consist of a Kelly Bar Adapter (KBA) and Type SS or RS drive tools as manufactured by Hubbell Power Systems, Inc. and used in accordance with the manufacturers written installation instructions.

Installation tooling should be maintained in good working order and safe to operate at all times. Flange bolts and nuts should be regularly inspected for proper tightening torque. Bolts, connecting pins, and retainers should be periodically inspected for wear and/or damage and replaced with identical items provided by the manufacturer. Heed all warning labels. Worn or damaged tooling should be replaced.

5.3.2 A torque indicator shall be used during Helical Pile installation. The torque indicator can be an integral part of the installation equipment or externally mounted in-line with the installation tooling. Torque indicators are available from Hubbell Power Systems, Inc.

5.3.2.a Shall be capable of providing continuous measurement of applied torque throughout the installation.

5.3.2.b Shall be capable of torque measurements in increments of at least 500 ft-lb

5.3.2.c Shall be calibrated prior to pre-production testing or start of work. Torque indicators which are an integral part of the installation equipment, shall be calibrated on-site. Torque indicators which are mounted in-line with the installation tooling, shall be calibrated either on-site or at an appropriately equipped test facility. Indicators that measure torque as a function of hydraulic pressure shall be calibrated at normal operating temperatures.

5.3.2.d Shall be re-calibrated, if in the opinion of the Owner and/or Contractor reasonable doubt exists as to the accuracy of the torque measurements.

5.4 Installation Procedures

5.4.1 <u>*Central Steel Shaft:*</u> *(Lead and Extension Sections)*

5.4.1.a The Helical Pile installation technique shall be such that it is consistent with the geotechnical, logistical, environmental, and load carrying conditions of the project.

5.4.1.b The lead section shall be positioned at the location as shown on the working drawings. Battered Helical Piles can be positioned perpendicular to the ground to assist in initial

©Copyright 2020 Hubbell, Inc.

advancement into the soil before the required batter angle shall be established. The Helical Pile sections shall be engaged and advanced into the soil in a smooth, continuous manner at a rate of rotation of 5 to 20 RPM's. Extension sections shall be provided to obtain the required minimum overall length and installation torque as shown on the working drawings. Connect sections together using coupling bolt(s) and nut torqued to 40 ft-lb.

5.4.1.c Sufficient down pressure shall be applied to uniformly advance the Helical Pile sections approximately 3 inches per revolution. The rate of rotation and magnitude of down pressure shall be adjusted for different soil conditions and depths.

5.5 Termination Criteria

5.5.1 The torque as measured during the installation shall not exceed the torsional strength rating of the central steel shaft.

5.5.2 The minimum installation torque and minimum overall depth criteria as shown on the working drawings shall be satisfied prior to terminating the Helical Pile installation.

5.5.3 If the torsional strength rating of the central steel shaft and/or installation equipment has been reached prior to achieving the minimum overall length required, the Contractor shall have the following options:

5.5.3.a Terminate the installation at the depth obtained subject to the review and acceptance of the Owner, or:

5.5.3.b Remove the existing Helical Pile and install a new one with fewer and/or smaller diameter helix plates. The new helix configuration shall be subject to review and acceptance of the Owner. If re-installing in the same location, the top-most helix of the new Helical Pile shall be terminated at least (3) three feet beyond the terminating depth of the original Helical Pile.

It is generally not recommended to re-use Type SS Helical Pile shaft material after it has been permanently twisted during a previous installation. Likewise, it is generally not recommended to re-use Type RS Helical Pile shaft material after the coupling bolt holes have been noticeably elongated during a previous installation.

5.5.4 If the minimum installation torque as shown on the working drawings is not achieved at the minimum overall length, and there is no maximum length constraint, the Contractor shall have the following options:

5.5.4.a Install the Helical Pile deeper using additional extension sections, or:

5.5.4.b Remove the existing Helical Pile and install a new one with additional and/or larger diameter helix plates. The new helix configuration shall be subject to review and acceptance of the Owner. If re-installing in the same location, the top-most helix of the new Helical Pile shall be terminated at least (3) three feet beyond the terminating depth of the original Helical Pile.

©Copyright 2020 Hubbell, Inc.

5.5.4.c De-rate the load capacity of the Helical Pile and install additional Helical Pile(s). The de-rated capacity and additional Helical Pile location shall be subject to the review and acceptance of the Owner.

5.5.5 If the Helical Pile is refused or deflected by a subsurface obstruction, the installation shall be terminated and the pile removed. The obstruction shall be removed, if feasible, and the Helical Pile re-installed. If the obstruction can't be removed, the Helical Pile shall be installed at an adjacent location, subject to review and acceptance of the Owner.

5.5.6 If the torsional strength rating of the central steel shaft and/or installation equipment has been reached prior to proper positioning of the last plain extension section relative to the final elevation, the Contractor may remove the last plain extension and replace it with a shorter length extension. If it is not feasible to remove the last plain extension, the Contractor may cut said extension shaft to the correct elevation. The Contractor shall not reverse (back-out) the Helical Pile to facilitate extension removal.

5.5.7 The average torque for the last two feet (0.6 meter) of penetration shall be used as the basis of comparison with the minimum installation torque as shown on the working drawings. The average torque shall be defined as the average of the last three readings recorded at one-foot intervals.

The average torque can be empirically related to the Helical Pile's ultimate capacity in end-bearing. This well-known attribute of helical piles can be used as a production control method to indicate the Helical Pile's end-bearing capacity.

6 HELICAL PILE LOAD TESTS

6.1 Pre-Production Tests (Optional)

Load tests shall be performed to verify the suitability and capacity of the proposed Helical Pile, and the proposed installation procedures prior to installation of production helical piles. _____ sacrificial test helical piles shall be constructed immediately prior to the start of work on the production piles. The Owner shall determine the number of pre-production tests, their location, acceptable load and movement criteria, and the type(s) of load direction (i.e., tension, compression, or both). Additional purpose of pre-production tests is to empirically verify the ultimate capacity to the average installing torque of the Helical Pile for the project site.

Pre-production Helical Pile installation methods, procedures, equipment, and overall length shall be identical to the production Helical Piles to the extent practical except where approved otherwise by the Owner.

The Contractor shall submit for review and acceptance the proposed Helical Pile load testing procedure. The pre-production test proposal shall be in general conformance with ASTM D1143 and/or D-3689, and shall provide the minimum following information:

- Type and accuracy of load equipment
- Type and accuracy of load measuring equipment

 ©Copyright 2020 Hubbell, Inc.

- Type and accuracy of pile-head deflection equipment
- General description of load reaction system, including description of reaction anchors
- Calibration report for complete load equipment, including hydraulic jack, pump, pressure gauge, hoses, and fittings.

The following test procedure shall be considered to meet the minimum requirements. It is not intended to preclude local building codes, which may mandate other requirements, such as full 24-hour load tests.

If the pre-production test fails to meet the design requirements, the Contractor shall modify the Helical Pile design and/or installation methods and retest the modified anchor, as directed by the Owner. *For prescriptive specifications, the Engineer will define the appropriate modifications.*

6.2 Load Test Equipment

6.2.1 The load test equipment shall be capable of increasing or decreasing the applied load incrementally. The incremental control shall allow for small adjustments, which may be necessary to maintain the applied load for a sustained, hold period.

6.2.2 The reaction system shall be designed so as to have sufficient strength and capacity to distribute the test loads to the ground. It should also be designed to minimize its movement under load and to prevent applying an eccentric load to the pile head. Test loads are normally higher than the design loads on the structure. The direction of the applied load shall be collinear with the Helical Pile at all times.

6.2.3 Dial gauge(s) shall be used to measure Helical Pile movement. The dial gauge shall have an accuracy of at least +/-0.001-in. and a minimum travel sufficient to measure all Helical Pile movements without requiring resetting the gauge. The dial gauge shall be positioned so its stem is parallel with the axis of the Helical Pile. The stem may rest on a smooth plate located at the pile head. Said plate shall be positioned perpendicular to the axis of the Helical Pile. The dial gauge shall be supported by a reference apparatus to provide an independent fixed reference point. Said reference apparatus shall be independent of the reaction system and shall not be affected by any movement of the reaction system.

6.2.4 The load test equipment shall be re-calibrated, if in the opinion of the Owner and/or Contractor reasonable doubt exists as to the accuracy of the load or deflection measurements.

6.3 Testing Program

6.3.1 The hydraulic jack shall be positioned at the beginning of the test such that the unloading and repositioning of the jack during the test shall not be required. The jack shall also be positioned co-axial with respect to the pile-head so as to minimize eccentric loading. The hydraulic jack shall be capable of applying a load not less than two times the proposed design load (DL). The pressure gauge shall be graduated in 100 psi increments or less. The stroke of the jack shall not be less than the theoretical elastic shortening of the total Helical Pile length at the maximum test load.

 ©Copyright 2020 Hubbell, Inc.

6.3.2 An alignment load (AL) shall be applied to the Helical Pile prior to setting the deflection measuring equipment to zero or a reference position. The AL shall be no more than 10% of the design load (i.e., 0.1 DL). After AL is applied, the test set-up shall be inspected carefully to ensure it is safe to proceed.

6.3.3 Axial compression or tension load tests shall be conducted by loading the Helical Pile in step-wise fashion as shown in Table-3 to the extent practical. Pile-head deflection shall be recorded at the beginning of each step and after the end of the hold time. The beginning of the hold time shall be defined as the moment when the load equipment achieves the required load step.

6.3.4 Test loads shall be applied until continuous jacking is required to maintain the load step or until the test load increment equals 200% of the design load (DL) (i.e., 2.0 DL), whichever occurs first. The observation period for this last load increment shall be 4 minutes. Displacement readings shall be recorded at 0 and 4 minutes (load increment maxima only).

6.3.5 The applied test load shall be removed in four approximately equal decrements per the schedule in Table-3. The hold time for these load decrements shall be 1 minute, except for the last decrement, which shall be held for 5 minutes.

This cyclic loading method will permit the analyses of the total, elastic, and net movements, since they can be separated and studied. For special test piles not to be used later in service, further load cycles may be conducted to provide an estimation of the ultimate capacity.

Table-3. Steps for Pre-Production Load Testing

LOAD STEP	HOLD TIME (MINUTES)
AL	1.0 Min.
0.20 DL	4.0 Min.
0.40 DL	4.0 Min.
0.60 DL	4.0 Min.
0.80 DL	4.0 Min.
1.0DL	4.0 Min.
0.75 DL	1.0 Min.
0.50 DL	1.0 Min.
0.25 DL	1.0 Min.
AL	1.0 Min.
0.5 DL	1.0 Min.
1.0 DL	1.0 Min.
1.2 DL	4.0 Min.
1.4 DL	4.0 Min.
1.6 DL	4.0 Min.
1.8 DL	4.0 Min.

©Copyright 2020 Hubbell, Inc.

2.0 DL	4.0 Min.
1.5 DL	1.0 Min.
1.0 DL	1.0 Min.
0.5 DL	1.0 Min.
AL	5.0 Min.

AL = Alignment Load; DL = Design Load

6.4 Acceptance Criteria for HELICAL PILE Verification Load Tests

Both of the following criteria must be met for approval:

1. The Helical Pile shall sustain the compression and tension design capacities (1.0 DL) with no more than ____ in. (mm) total vertical movement of the pile-head as measured relative to the top of the Helical Pile prior to the start of testing.
2. Failure does not occur at the 2.0 DL maximum compression and tension test loads. The failure load shall be defined by one of the following definitions – whichever results in the lesser load:
   - The point at which the movement of the Helical Pile tip exceeds the elastic compression/tension of the pile shaft by 0.1B, where B is defined as the average helix diameter. *(Note that tension loads are limited to the minimum ultimate tensile strength of the coupling joint(s) of the central steel shaft. It is recommended to use the minimum ultimate tensile strengths as published by Hubbell Power Systems, Inc. (shown in Section 7 of the Technical Design Manual – 4th Edition).*
   - The point at which the slope of the load versus deflection (at end of increment) curve exceeds 0.05 inches/kip.

The Contractor shall provide the Owner copies of field test reports confirming Helical Pile configuration and construction details within 24 hours after completion of the load tests. Formal copies shall be submitted as per Section 3.3. This written documentation will either confirm the load capacity as required on the working drawings or propose changes based upon the results of the pre-production tests.

When a Helical Pile fails to meet the acceptance criteria, modifications shall be made to the design, the construction procedures, or both. These modifications include, but are not limited to, de-rating the Helical Pile load capacity, modifying the installation methods and equipment, increasing the minimum effective installation torque, changing the helix configuration, or changing the Helical Pile material (i.e., central steel shaft). Modifications that require changes to the structure shall have prior review and acceptance of the Owner. The cause for any modifications of design or construction procedures shall be decided in order to determine any additional cost implications.

6.5 **Production Helical Pile Testing** (This may be the only type of load test conducted, depending on project conditions.)

The Contractor shall perform proof tests on a minimum of ___% of the total production Helical Piles. The Helical Piles to be tested will be selected by the Owner. At the Contractor's suggestion, but with the Owner's permission, tension tests may be performed in lieu of compression tests up to 1.00 DL for Helical Piles with sufficient structural tension capacity. *The requirements of Table-4 may be regarded as a*

 ©Copyright 2020 Hubbell, Inc.

minimum, however, it is not recommended to test production Helical Piles to values of up to 2.0 DL unless the Helical Pile's failure load is significantly higher than 2.0 DL. The maximum production Helical Pile test load shall be determined by the Owner. For example, ASTM D1143 stipulates testing to 2.0 DL.

The test sequence shall be as shown in Table-4 to the extent practical.

Table-4. Steps for Production Load Testing

LOAD STEP	HOLD TIME (MINUTES)
AL	0 Min.
0.20 DL	4.0 Min.
0.40 DL	4.0 Min.
0.60 DL	4.0 Min.
0.80 DL	4.0 Min.
1.00 DL	4.0 Min.
0.60 DL	1 Min.
0.40 DL	1 Min.
0.20 DL	1 Min.
AL	5 Min.

AL = Alignment Load; DL = Design Load

The acceptance criteria for production Helical Piles shall be per Section 6.4 Item 1.

If a production Helical Pile that is tested fails to meet the acceptance criteria, the Contractor shall be directed to proof test another Helical Pile in the vicinity. For failed Helical Piles and further construction of other foundations, the Contractor shall modify the design, the construction procedure, or both. These modifications include, but are not limited to, installing replacement Helical Piles, modifying the installation methods and equipment, increasing the minimum effective installation torque, changing the helix configuration, or changing the Helical Pile material (i.e., central steel shaft). Modifications that require changes to the structure shall have prior review and acceptance of the Owner. Any modifications of design or construction procedures shall be at the Contractor's expense.

6.6 Lateral Testing

If required, lateral load tests shall be conducted in accordance with ASTM D3966. If a production Helical Pile is to be lateral load tested, care must be taken not to cause permanent damage – which can reduce its axial load capacity. The acceptance criteria as selected by the Owner, typically expressed as a maximum total movement at a specific load, must be realistic in its magnitude so as not to potentially damage the structure. It is suggested that lateral loads be resisted through some other means, such as soil anchors, battered piles, or enlarged concrete pile caps/grade beams.

7 MEASUREMENT AND PAYMENT

©Copyright 2020 Hubbell, Inc.

Helical Pile work can be paid for in different ways, reflecting the relative risk to be accepted by the Owner and the Contractor. However, the following items are common and standard.

QUANTITY	DESCRIPTION	UNIT
1	Mobilization/Demobilization	Lump sum
As required	Conduct pre-production test program of declared scope	Lump sum
As required	Test Production Helical Piles	Per foundation
-	Obstructions	Per hour or Force Account
As required	Helical Pile Installation	As below

- *Per Unit Length*: Helical Piles meeting the design capacity shall be paid for per lineal foot below grade.
- *Per Helical Pile*: Helical Piles meeting the design capacity shall be paid for on a "per foundation" basis (no allowance for changes in length relative to that originally bid).
- *Per Helical Pile with Add/Deduct*: Helical Piles meeting the design capacity shall be paid for on a "per foundation" basis, with a predetermined length, and an add/deduct amount per lineal foot to accommodate field changes.
- *Lump Sum*: The whole Helical Pile project shall be paid for on a "lump sum" basis (no allowance for changes due to additional Helical Pile length relative to that originally bid).

END OF SPECIFICATION

©Copyright 2020 Hubbell, Inc.

APPENDIX

TABLE-1

GUIDANCE OF GROUND AGGRESSIVENESS CLASSIFICATION

Soil tests may be performed to measure the aggressiveness of the soil environment, especially if field observations indicate corrosion of existing structures. The most common and simplest tests are for electrical resistivity, pH, chloride, and sulfates. The designation for these tests and the critical values defining whether an aggressive soil environment exists, are as shown below. Per FHWA-RD-89-198, the ground is considered aggressive if any one of these indicators shows critical values.

Property	Test Designation	Critical Values
Resistivity	ASTM G 57 AASHTO T-288	below 2,000 ohm-cm
pH	ASTM G 51 AASHTO T-289	below 5
Sulfate	ASTM D 516M ASTM D 4327	above 200 ppm
Chloride	ASTM D 512 ASTM D 4327 AASHTO T-291	above 100 ppm
Organic Content	AASHTO T-267	1% max

©Copyright 2020 Hubbell, Inc.

Model Specification:
CHANCE® HELICAL PULLDOWN™ Micropiles for Structural Support

Preface

Types of Specifications

The three types of specifications that are used for HELICAL PULLDOWN™ Micropile (HPM) projects are:

Open Specifications: The Contractor is given the responsibility for the scope and design of the HPM installation. In addition, the construction, capacity, and performance of the HPM are the sole responsibility of the Contractor. This specification assumes that the Owner or Designer has provided the required structural loads. This specification type is most common for securing bids on temporary projects, and is not recommended for permanent applications.

Performance Specifications: The Contractor is given the responsibility for certain design and/or construction procedures, but must demonstrate to the Owner through testing and/or mutually agreed upon acceptance criteria that the production piles meet or exceed the specified performance parameters. This specification assumes that the location and the required loads of the HPM have been specified. The Contractor and Owner share the responsibility for the work.

Prescriptive Specifications: The Owner has the sole responsibility for the scope and design of the HPM installation and specifies the procedures that must be followed. Prescriptive specifications mandate the Owner to be responsible for the proper performance of the production piles. The Contractor is responsible for fulfilling the obligations/details as specified in the construction documents.

Performance specifications are the most common and allow certified Contractors to use their unique installation methods and experience for any given site conditions. Owners receive the benefit of value engineering, which can result in lower costs.

The Owner, Designer, and Contractor will be jointly responsible for the design, installation, acceptance, and performance of HPM's. The installation of an HPM requires specialized equipment, techniques, and trained work crews. Every detail of the work cannot be specified, and every potential problem cannot be anticipated. Therefore, a contractor trained and certified by A. B. Chance Company must be selected.

A list of the major tasks to be performed on an HPM project is shown in Table-1 of the Model Specifications. The Owner or his representative should select the type of specification and procurement

method. The responsible party for each task must be identified and mutually agreed upon at the earliest point in the contracting process. The completed Table-1 should be included in the construction documents. The process of continuous communication between all the parties involved is essential to achieve a satisfactory result. Clear communication and close cooperation are particularly important in the start-up phase and in testing. In addition, a timely preparation and review of all submittals is critical.

This model specification can be adapted to each of the three types of specifications. However, it is primarily written for the performance type. The identity of the "Contractor" and the "Owner" is always well defined, unlike that of the "Designer" or "Engineer". For example, the "Engineer" may be an employee(s) of the Contractor, or a third party consultant hired to secure a lower cost alternative during the bidding process. In contrast, the "Engineer" may be the Owner, an employee(s) of the Owner, or a representative hired by the Owner. It is recommended that the Engineer be a third party agency employed by the Owner to serve in the owner's best interests during the various stages of the contract.

For purposes of this Model Specification, the subject is a high capacity HELICAL PULLDOWN™ Micropile installed using the apparatus and methods detailed in patent U.S. 5,707,180. At present, maximum working or design loads are in the 100 ton range. The HPM consists of helical bearing plate(s) attached at the tip of a high strength central steel shaft surrounded by a column of grout, gravity-fed from the surface into the annulus formed by the displacement of soil around the central steel shaft. The central steel shaft is intended to accept most of the applied load. The grout columns are typically 4 to 10 inches in diameter and will accept load directly axially and/or laterally to provide structural support. Additional steel reinforcement consisting of re-bar or casing can be incorporated into the HPM to increase its load carrying capacity.

It is suggested that the specification writer accurately and completely modify this model to suit his/her particular case.

Items in italics may be considered as "Commentary" and as such may be deleted or retained to suit the needs of the specification writer.

These general references provide additional background to HELICAL PULLDOWN™ Micropile technology:

- A. B. Chance Company, *HELICAL PULLDOWN™ Micropiles Training Manual*, Copyright 2000 Hubbell, 210 North Allen St., Centralia, MO 65240
- Vickars Developments Co. LTD., *PULLDOWN™ Pile Manual*, 6220 9th Ave., Burnaby, B.C. Canada V3N 2T6
- Vickars, R. A., and Clemence, Samuel P., *Performance of Helical Piles with Grouted Shafts*, ASCE Geotechnical Special Publication No. 100, New Technological and Design Developments in Deep Foundations, Proceedings of Sessions of Geo-Denver 2000, pp. 327-341
- United States Patent 5,707,180, Method and Apparatus for Forming Piles In-Situ, Vickars, R. A., Vickars, J. C. T., Toebosch, Gary
- Hoyt, R.M. and Clemence, S.P., 1989. Uplift Capacity of Helical Anchors in Soil. *Proceedings of the 12th International Conference on Soil Mechanics and Foundation Engineering*, Vol. 2, pp. 1019-1022.

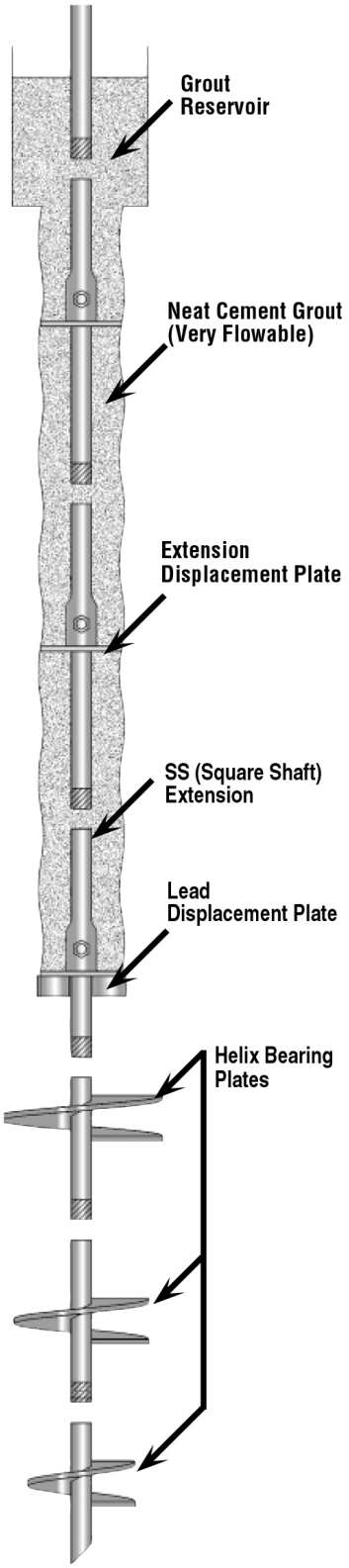

Figure-1 Typical Cross Section

Model Specification
Table of Contents:

1. GENERAL
1.1 Purpose of Specification
1.2 Scope of Work
1.3 Qualifications of the Contractor
1.4 Related Project Specifications
1.5 Definitions
1.6 Allowable Tolerances
1.7 Quality Assurance
1.8 Design Criteria
1.9 Ground Conditions

2. REFERENCED CODES AND STANDARDS
2.1 American Society for Testing and Materials
2.2 American Welding Society
2.3 American Society of Civil Engineers
2.4 Deep Foundations Institute
2.5 Post Tensioning Institute
2.6 Society of Automotive Engineers

3. SUBMITTALS
3.1 Construction Submittals
3.2 Installation Records
3.3 Test Reports
3.4 Closeout Submittals

4. PRODUCTS AND MATERIALS
4.1Central Steel Shaft
4.2 Helical Bearing Plate
4.3 Bolts
4.4 Couplings
4.5 Displacement Plates/Centralizers
4.6 Plates, Shapes, or Pier Caps
4.7 Pipe/Casing
4.8 Water
4.9 Cement
4.10 Admixtures
4.11 Aggregate
4.12 Corrosion Protection (Optional)

5. EXECUTION
5.1 Site Conditions
5.2 Installation Equipment
5.3 Installation Tooling
5.4 Installation Procedures
5.5 Termination Criteria

6. MICROPILE LOAD TESTS
6.1 Pre-Production Pile Tests (Optional)
6.2 Load Test Procedures
6.3 Acceptance Criteria for Verification Load Tests
6.4 Production Pile Testing
6.5 Lateral Testing

APPENDICES
Mechanical Strength Ratings, Helical Screw Piers
Guidance of Ground Agressiveness Classification
Installation Log
Test Report Log

Model Specification:
CHANCE® HELICAL PULLDOWN™ Micropiles for Structural Support

1. GENERAL

1.1 Purpose of Specification

The purpose of this specification is to detail the furnishing of all designs, materials, tools, equipment, labor supervision, and installation techniques necessary to install HELICAL PULLDOWN™ Micropiles as detailed on the drawings, including pile-top details. This shall include provisions for load testing that may be part of the scope of work

Specifier Note: This specification may require modification to account for unusual and/or unforeseen site and subsurface conditions and the particular circumstances of the project.

1.2 Scope of Work

This work consists of furnishing all necessary engineering and design services (if required), supervision, labor, tools, materials, and equipment to perform all work necessary to install the HELICAL PULLDOWN™ Micropiles (HPM), at (location, City, State/Province) for (Company, State/Province or Private Authority) per the specifications described herein, and as shown on the drawings. The Contractor shall install a HPM that will develop the load capacities as detailed on the drawings. This may also include provisions for load testing to verify pile capacity and deflection, if part of the scope of work. The responsibilities and duties of the respective parties for this project are summarized in Table-1.

Table-1. Tasks and Responsibilities to be Allocated for HPM Work

TASK		RESPONSIBLE PARTY*
1	Site Investigation, Geotechnical Investigation, Site Survey, and potential work restrictions	
2	Type of specification, requirement for a pre-contract testing program, and procurement method	
3	Obtaining easements	
4	Overall scope of work, design of the piled structure – including design loads (vertical, horizontal, etc.), pile locations, and pile spacing and orientation	
5	Definition and qualification of safety factors	
6	Calculation/estimation of allowable structural and/or pile movement in service (acceptance criteria)	
7	Definition of service life (temporary – months or permanent - years) and required degree of corrosion protection based on site conditions	

8	Type and number of tests (pre-contract, pre-production and production)	
9	Minimum total pile length, depth to bearing stratum	
10	HELICAL PULLDOWN™ Micropile components and details	
11	Details of corrosion protection	
12	Details of pile connection to structure (e.g., for static and seismic conditions)	
13	Preparation of Drawings and test reports	
14	Evaluation of test results	
15	Construction methods, schedule, sequencing, and coordination of work	
16	Requirements of field production control, including logging of installation torque vs. installed depth	
17	Supervision of work	
18	Long-term monitoring	

* To be filled in by specification writer.

1.3 Qualifications of the HELICAL PULLDOWN™ Micropile Contractor

The HPM Contractor shall be experienced in performing design and construction of HELICAL PULLDOWN™ Micropiles and shall furnish all materials, labor, and supervision to perform the work. The Contractor shall be trained and certified by A. B. Chance Company in the proper methods of design and installation of the patented HPM system. The Contractor shall provide names of on-site personnel materially involved with the work, including those who carry documented certification from A. B. Chance Company. At a minimum, these personnel shall include foreman, machine operator, and project engineer/manager.

The HELICAL PULLDOWN™ Micropile Contractor shall not sublet the whole or any part of the contract without the express written permission of the Owner.

1.4 Related Project Specifications

To be determined by the specification writer.

1.5 Definitions

A partial list follows. The Owner may wish to add other specific, project-related items.

Admixture: Substance added to the grout to either control bleed and/or shrinkage, improve flowability, reduce water content, retard setting time, or resist washout.

Alignment Load (AL): A nominal load applied to a HPM during testing to keep the testing equipment correctly positioned and remove any slack in the reaction system.

Bearing Stratum:	Soil layer(s) of sufficient strength capable of resisting the applied axial load transferred by the HPM.
Bonded Length:	The length of the HPM grout column that is bonded to the soil and which is used to transfer the applied axial load to the surrounding soil.
Casing:	Steel or PVC pipe used during the installation process to stabilize the annular volume surrounding the central steel shaft. Depending on the details of the HPM construction and soil conditions, the casing may be extracted after grouting, or may remain partially or fully in place, as part of the final pile configuration.
Contractor:	The person/firm responsible for performing the HPM work.
Coupling:	Central steel shaft connection means formed as integral part of the plain extension shaft material. For SS & RS3500.300 anchors, couplings shall be hot upset forged sockets.
Creep:	The movement that occurs during the creep test of a HPM under a constant load.
Design Load (DL):	Maximum anticipated service load applied to the HPM. Also known as the working load (WL).
Elastic Movement:	The recoverable movement measured during a HPM test resulting from the elastic shortening or lengthening of the pile material.
Extension Displacement Plate (EDP):	A device to centrally locate the steel shaft within the annular volume and to assist in the downward flow of grout.
Grout (PULLDOWN):	Portland cement based grout that is gravity fed into the annular volume surrounding the central steel shaft during installation. The fine aggregate and admixtures provide flowability, resist washout, and provide additional corrosion protection. Provides the load transfer in skin friction to the surrounding soil along the length of the HPM.
Helical Extension:	Screw pier component installed immediately following the lead section, if required. This component consists of one or more helical plates welded to a central steel shaft.

HELICAL PULLDOWN™ Micropile: A small diameter, soil displacement, cast-in-place screw pier, in which most of the applied load is resisted by the central steel shaft and steel reinforcement, if installed. Load transfer to soil is both end bearing and friction. United States Patent 5,707,180, Method and Apparatus for Forming Piles In-Situ. A.k.a. HPM.

Helical Plate: Generally round steel plate formed into a ramped spiral. The helical shape provides the means to install the screw pier, plus the plate transfers load to soil in end-bearing. Helical plates are available in various diameters and thicknesses.

Lead Displacement Plate (LDP): Soil displacement means used to create the annular volume surrounding the central steel shaft. The plate diameters vary depending on the size of the central steel shaft, the pile design, the soils, and the applied load to the pile.

Lead Section: The first screw pier component installed into the soil, consisting of single or multiple helical plates welded to a central steel shaft. Helical plates provide end-bearing capacity.

Micropile: a.k.a. HPM

Net Settlement: The non-elastic (non-recoverable) movement of a HPM measured during load testing.

Overburden: Non-lithic material, natural or placed, typically of soft consistency or loose relative density, which overlies competent load bearing stratum.

Pile Cap: Connection means by which structural loads are transferred to the HPM. The type of connection varies depending upon the requirements of the project and type of HPM material used.

Care must be used in the design of pile caps to ensure adequate structural load transfer. Design constraints such as expansive soils, compressible soils, and seismic loads must be accounted for in pile cap design.

Plain Extension: Central steel shaft without helical plates. It is installed following the installation of the lead section or helical extension (if used). The units are connected with integral couplings and bolts. Plain extensions are used to extend the helical plates beyond the specified minimum depth and into competent load bearing stratum.

Preloading:	Also known as prestressing, load is applied to the HPM prior to connection to structure, to minimize structural movement in service.
Proof Test:	Incremental loading of a HPM, holding for a period of time, and recording the total movement at each load increment.
Safety Factor:	The ratio of the ultimate capacity to the working or design load used for the design of any structural element.
Screw Pile/Pier:	A screw pile/pier is a bearing type foundation consisting of a lead section, helical extension (if so required by site conditions), plain extension section(s), and a pile cap.
Test Load (TL):	The maximum load applied to the HPM during testing.
Ultimate Capacity (UC):	Limit state based on the structural and/or geotechnical capacity of the HPM defined as the point at which no additional capacity can be justified.
Verification Test (VL):	Similar to a Proof Test except a cyclic loading method is used to analyze total, elastic, and net movement of the pile. Used for pre-contract or pre-production pile load tests.
Working Load (WL):	Equivalent term for Design Load.

1.6 Allowable Tolerances

The tolerances quoted in this section are suggested maximums. The actual values established for a particular project will depend on the structural application and site conditions.

1.6.1 Centerline of piling shall not be more than 3 inches from indicated plan location.

1.6.2 Pile plumbness shall be within 2° of design alignment.

1.6.3 Top elevation of pile shall be within +1 inch to -2 inches of the design vertical elevation.

1.6.4 Centerline of central steel shaft shall not be more than 3/4 inches from the centerline of the pile.

1.7 Quality Assurance

1.7.1 HELICAL PULLDOWN™ Micropiles shall be installed by authorized A. B. Chance Company certified Contractors. These Contractors shall have satisfied the certification requirements relative to the technical aspects of the product and installation procedures as therein specified.

Certification documents shall be provided upon request to the Owner or their representative.

1.7.2 The certified Contractor shall employ an adequate number of skilled workers who are experienced in the necessary crafts and who are familiar with the specified requirements and methods needed for proper performance of the work of this specification.

1.7.3 All HPMs shall be installed in the presence of a designated representative of the Owner unless said representative informs the Contractor otherwise. The designated representative shall have the right to access to any and all field installation records and test reports.

1.7.4 Screw pier components of HPMs as specified therein shall be manufactured by a facility whose quality systems comply with ISO (International Organization of Standards) 9001 requirements. Certificates of Registration denoting ISO Standards Number shall be presented upon request to the Owner or their representative.

1.7.5 Hubbell Power Systems/A. B. Chance Company provides a standard one-year warranty on materials and workmanship of the product. Any additional warranty provided by the Contractor shall be issued as an addendum to this specification.

1.7.6 Design of HPMs shall be performed by an entity as required in accordance with existing local code requirements or established local practices. This design work may be performed by a licensed professional engineer, a certified A. B. Chance certified Contractor, or designer depending upon local requirements or practices.

1.8 Design Criteria

1.8.1 HELICAL PULLDOWN™ Micropiles shall be designed to meet the specified loads and acceptance criteria as shown on the drawings. The calculations and drawings required from the Contractor or Engineer shall be submitted to the Owner for review and acceptance in accordance to Section 3.1 "Construction Submittals".

1.8.2 The allowable working load on the HPM shall not exceed the following values:

1.8.2.1 For compression loads:

$$P_{allowc} = (0.33 * f_c * A_{grout}) + (0.4 * f_{ycase} * A_{case}) + (0.4 * f_{yshaft} * A_{shaft})$$

Where: P_{allowc} = allowable working load in compression (kip)
f_c = compressive strength of grout (ksi)
A_{grout} = area of grout (in.^{2})
f_{ycase} = yield strength of casing (ksi)
A_{case} = area of steel case (with corrosion allowance if required) (in.^{2})
f_{yshaft} = minimum yield strength of central steel shaft (ksi)
A_{shaft} = area of central steel shaft (in.^{2})

The minimum yield strength of the central steel shaft is as follows:

Type SS5: 70 ksi; Type SS150, SS175, SS200, SS225: 90 ksi; Type RS3500.300: 50 ksi. Ultimate concrete strain rate (0.003 in/in) may reduce the maximum useable strength of the central steel shaft and case below their specified yield strength.

These allowable working loads may be reduced by the allowable load capacity per helix plate(s) – depending on what fraction of the total load is transferred to the soil in end bearing. It is recommended to use the allowable helix capacities per screw pier type as published by A. B. Chance Company (shown in Table-A of the Appendix).

1.8.2.2 For tension loads:

$$P_{allowt} = 0.5 * S_{ut}$$

Where: P_{allowt} = allowable working load in tension (kip)
S_{ut} = Minimum ultimate tensile strength of central steel shaft segment (at coupling joint) (kip)

It is recommended to use the minimum ultimate tensile strengths as published by A. B. Chance Company (shown in Table-A of the Appendix).

These allowable working loads may be reduced by the allowable load capacity per helix plate(s) – depending on what fraction of the total load is transferred to the soil in end bearing. It is recommended to use the allowable helix capacities per screw pier type as published by A. B. Chance Company (shown in Table-A of the Appendix).

1.8.3 The ultimate structural capacity shall be determined as:

1.8.3.1 For compression loads:

$$P_{ultc} = (0.85 * f_c * A_{grout}) + (f_{ycase} * A_{case}) + (f_{yshaft} * A_{shaft})$$

Where: P_{ultc} = ultimate structural capacity in compression (kip)
f_c = compressive strength of grout (ksi)
A_{grout} = area of grout (in.^{2})
f_{ycase} = yield strength of casing (ksi)
A_{case} = area of steel case (with corrosion allowance if required) (in.^{2})
f_{yshaft} = minimum yield strength of central steel shaft (ksi)
A_{shaft} = area of central steel shaft (in.^{2})

The minimum yield strength of the central steel shaft is as follows:
Type SS5: 70 ksi; Type SS150, SS175, SS200, SS225: 90 ksi; Type RS3500.300: 50 ksi. Ultimate concrete strain rate (0.003 in/in) may reduce the maximum useable strength of the central steel shaft and case below their specified yield strength.

The ultimate structural capacity may be reduced by the ultimate load capacity per helix plate(s) – depending on what fraction of the total load is transferred to the soil in end bearing. It is recommended to use the ultimate helix capacities per screw pier type as published by A. B. Chance Company (shown in Table-A of the Appendix).

1.8.3.2 For tension loads:

$$P_{ultt} = S_{ut}$$

Where: P_{ultt} = ultimate structural capacity in tension (kip)
S_{ut} = Minimum ultimate tensile strength of central steel shaft segment (at coupling joint) (kip)

It is recommended to use the minimum ultimate tensile strengths as published by A. B. Chance Company (shown in Table-1 of the Appendix).

The ultimate structural capacity may be reduced by the ultimate load capacity per helix plate(s) – depending on what fraction of the total load is transferred to the soil in end bearing. It is recommended to use the ultimate helix capacities per screw pier type as published by A. B. Chance Company (shown in Table-A of the Appendix).

1.8.4 Lateral Load and Bending: Where lateral or base shear loads are indicated on the plans, the bending moment from said loads shall be determined using lateral load analysis program such as LPILE or equal commercially available software. The required soil parameters (c,f, g, and k_s) for use with LPILE or equal shall be provided in the geotechnical reports. The Owner shall determine the allowable response to lateral loads. The combined bending and axial load factor of safety of the HPM shall be as determined by the Owner.

It is recommended to list below each load combination and required factor of safety for this specific project.

1.8.5 Expansive Soils: HPMs used in areas where expansive soils are present may require the use of special construction methods to mitigate possible shrink/swell effects. HPM shafts should be isolated from the concrete footing if said footing is in contact with the expansive soil.

1.8.6 Down-Drag/Negative Skin Friction: HPMs used in areas where compressible or decomposing soils overlie bearing stratum, or where expansive or frozen soils can cause pile jacking, HPM shafts should be provided with a no-bond zone along a specified length to prevent load transfer that may adversely affect pile capacity. Alternately, HPM's can be provided with sufficient axial load capacity to resist down drag/negative skin friction forces.

1.8.7 The HPM attachment (pile cap) shall distribute the design load (DL) to the concrete foundation such that the concrete bearing stress does not exceed those in the ACI Building Code and the stresses in the steel plates/welds does not exceed AISC allowable stresses for steel members.

1.8.8 The HPM capacity in soil (either in skin friction or end-bearing) shall not be relied upon from the following soil layers as defined in the geotechnical reports:

The overall length and installed torque of an HPM shall be specified such that the required in-soil capacity is developed by skin friction between grout and soil over a suitable length and by end-bearing on the helical plate(s) in an appropriate strata(s).

It is recommended that the theoretical end-bearing capacity of the helical plates be determined using HeliCAP™ Engineering Software or equal commercially available software. The required soil parameters (c, f, g, or N-values) for use with HeliCAP™ or equal shall be provided in the geotechnical reports. The Owner shall determine the allowable response to axial loads.

HELICAL PULLDOWN™ Micropiles are primarily end-bearing foundation elements, but can develop significant secondary capacity by skin friction. Note that screw piers are not suited for solid, competent rock, but the helical plates can penetrate into dense bearing soils. It is recommended that HPMs be installed to a specified minimum torque and depth to ensure the helical plates are terminated in bearing soils. Appropriate and repeatable installation techniques and pile termination criteria must be identified and verified in the field.

1.8.9 Corrosion Protection

This section is optional (see below). Provisions of this section and Section 4.12 below may not be required in the Specification. If this section is not used, then Section 4.12 should likewise be deleted. The degree and extent of corrosion protection must be specified by the Owner (Table-1).

Corrosion protection is a function of structure type, service life, loading condition, and the overall aggressiveness of the project soils. The need for corrosion protection of HPM's subjected to tension loads must be carefully determined and specified as necessary.

Corrosion resistant coatings (i.e. epoxy, plastic sheath) on the lead section are impractical due to abrasive action wearing off the coating as the soil flows over the helical plates and around the central steel shaft. Hot dip galvanization is the only practical means to provide a corrosion resistant coating capable of withstanding the rigors of installation. Casing is typically not provided with corrosion resistant coatings for the same reasons. Extension sections are typically hot-dip galvanized, but other coatings can be specified.

The following requirements are typical. The specifier should review and edit as appropriate for the project.

Structure Type: _____ *(e.g. temporary, permanent) with a temporary structure being defined within a specified time frame (i.e. months rather than years). In general, permanent structures have a service life greater than 24 months.*

Temporary structures do not require corrosion protection.

Service Life: _____*(years) a typical service life of 50 years should be used*

unless otherwise specified. If the service life of a temporary HPM is likely to be extended due to construction delays, it should be considered permanent.

For a service life of less than 20 years in non-aggressive soil, corrosion protection is not recommended.

Corrosion protection requirements for the various HPM elements shall be provided meeting the requirements of Table-2 for:

Loading Type: _____
to be filled in by the Specifier with optional location limits defined (e.g. Tension, Compression, or both).

Soil: _____ *Aggressive or Non-Aggressive with optional location and elevation limits defined by the Specifier.*

For guidance on aggressiveness classification, see Table B in the Appendix. It is recommended to retain the services of a corrosion design professional for very aggressive soils.

TABLE-2

CORROSION PROTECTION				
LOADING	**TENSION[1]**		**COMPRESSION**	
SOIL	**AGGRESSIVE[2]**	**NON-AGGRESSIVE**	**AGGRESSIVE[2]**	**NON-AGGRESSIVE**
STEEL CASING (if used)	Steel casing not recommended for tension load capacity	Steel casing not recommended for tension load capacity	Minimum 1/8" corrosion loss on outside The Specifier may use a different corrosion loss per AASHTO, ASCE, or FHWA Standards.	None The Specifier may use a corrosion loss per AASHTO, ASCE, or FHWA Standards.
CENTRAL STEEL SHAFT (Lead Section)	a. Galvanization OR b. Minimum 1/8" corrosion loss on outside	a. Bare steel OR b. Galvanization OR c. Minimum 1/8" corrosion loss on outside	a. Galvanization OR b. Minimum 1/8" corrosion loss on outside	a. Bare steel OR b. Galvanization OR c. Minimum 1/8" corrosion loss on outside
CENTRAL STEEL SHAFT (Extension Section)	a. Galvanization OR b. Epoxy coating AND	a. Bare steel OR b. Galvanization OR	a. Galvanization OR b. Epoxy coating AND	a. Grout cover[3]

	Grout cover[3] The Specifier may elect to use a grout case (i.e., PVC).	c. Epoxy coating AND Grout cover[3]	Grout cover[3] The Specifier may elect to use a grout case (i.e., PVC).	

NOTES:
Lettered items are options.
For guidance on aggressiveness classification, see Table B of the Appendix.

1. Sustained tension or temporary tension (wind, seismic, impact) on life critical structural. For temporary tension on normal structures, corrosion protection under Compression is often used.
2. Corrosion protection shall extend 15'-0 below corrosive material.
3. Minimum 1" in soil. If protective coatings (galvanization, epoxy) are provided in compression, minimum cover may be 0.25" in soil.

1.9. Ground Conditions

The Geotechnical Report, including logs of soil borings as shown on the boring location plan, shall be considered to be representative of the in-situ subsurface conditions likely to be encountered on the project site. Said Geotechnical Report shall be the used as the basis for HELICAL PULLDOWN™ Micropile design using generally accepted engineering judgement and methods.

If soil borings are not available, it is suggested to install a screw pier at various locations on the project site. Using the well-known installed torque vs. capacity attribute of screw piers, a presumptive soil profile can be generated.

The Geotechnical Report shall be provided for purposes of bidding. If during HPM installation, subsurface conditions of a type and location are encountered of a frequency that were not reported, inferred and/or expected at the time of preparation of the bid, the additional costs required to overcome such conditions shall be considered as extras to be paid for.

All available information related to subsurface and general site conditions should be made available to all bidders at the time of bid preparation. It is not reasonable to expect bidders to conduct supplemental site investigations at their own risk and cost prior to bidding, unless the specific contract requirements call for it (Table-1) and provide for appropriate compensation. A mandatory site visit and pre-bid meeting should be held so that the details of the project and the specifications can be thoroughly discussed. These steps will help avoid technical and contractual problems developing during the execution of the work, and will help all parties manage their respective risk.

2 REFERENCED CODES AND STANDARDS

Standards listed by reference, including revisions by issuing authority, form a part of this specification section to the extent indicated. Standards listed are identified by issuing authority, authority abbreviation, designation number, title, or other designation established by issuing authority. Standards subsequently referenced herein are referred to by issuing authority abbreviation and standard designation. In case of conflict, the particular requirements of this specification shall prevail. The latest

publication as of the issue of this specification shall govern, unless indicated otherwise.

2.1 American Society for Testing and Materials (ASTM):

2.1.1 ASTM A29/A29M Steel Bars, Carbon and Alloy, Hot-Wrought and Cold Finished.
2.1.2 ASTM A36/A36M Structural Steel.
2.1.3 ASTM A53 Pipe, Steel, Black and Hot-Dipped, Zinc-Coated Welded and Seamless.
2.1.4 ASTM A153 Zinc Coating (Hot Dip) on Iron and Steel Hardware.
2.1.5 ASTM A775 Electrostatic Epoxy Coating
2.1.6 ASTM A193/A193M Alloy-Steel and Stainless Steel Bolting Materials for High Temperature Service.
2.1.7 ASTM A252 Welded and Seamless Steel Pipe Piles.
2.1.8 ASTM A320/A320M Alloy-Steel Bolting Materials for Low Temperature Service.
2.1.9 ASTM A500 Cold-Formed Welded and Seamless Carbon Steel Structural Tubing in Rounds and Shapes.
2.1.10 ASTM A572 HSLA Columbium-Vanadium Steels of Structural Quality.
2.1.11 ASTM A618 Hot-Formed Welded and Seamless High-Strength Low-Alloy Structural Tubing.
2.1.12 ASTM A656 Hot-Rolled Structural Steel, High-Strength Low-Alloy Plate with Improved Formability.
2.1.13 ASTM A1018 Steel, Sheet and Strip, Heavy Thickness Coils, Hot Rolled, Carbon, Structural, High-Strength, Low-Alloy, Columbium or Vanadium, and High-Strength Low-Alloy with Improved Formability.
2.1.14 ASTM C33 Concrete Aggregates.
2.1.15 ASTM C109 Compressive Strength of Hydraulic Cement Mortar.
2.1.16 ASTM C150 Portland Cement.
2.1.17 ASTM C494 Chemical Admixtures for Concrete.
2.1.18 ASTM C618 Coal Fly Ash and Raw or Calcined Natural Pozzolan for Use as a Mineral Admixture in Concrete
2.1.19 ASTM C1240 Silica Fume for Use as a Mineral Admixture in Hydraulic-Cement Concrete, Mortar, and Grout
2.1.20 ASTM C1107 Packaged Dry, Hydraulic-Cement Grout (Nonshrink)
2.1.21 ASTM D1143 Method of Testing Piles Under Static Axial Compressive Load.
2.1.22 ASTM D1784 Specification for Rigid Poly Vinyl Chloride (PVC) Compounds and Chlorinated Poly Vinyl Chloride (CPVC) Compounds.
2.1.23 ASTM D1785 Specification for Poly(Vinyl Chloride) (PVC) Plastic Pipe, Schedules 40, 80, and 120.
2.1.24 ASTM D3034 Specification for Type PSM Poly(Vinyl Chloride) (PVC) Sewer Pipe and Fittings.
2.1.25 ASTM D3689 Method of Testing Individual Piles Under Static Axial Tensile Load.
2.1.26 ASTM D3966 Standard Test Method for Piles Under Lateral Load.

2.2 American Welding Society (AWS):

2.2.1 AWS D1.1 Structural Welding Code – Steel.
2.2.2 AWS D1.2 Structural Welding Code – Reinforcing Steel.

2.3 American Society of Civil Engineers (ASCE):

2.3.1 ASCE 20-96 Standard Guidelines for the Design and Installation of Pile Foundations.

2.4 Deep Foundations Institute (DFI):

2.4.1 *Guide to Drafting a Specification for High Capacity Drilled and Grouted Micropiles for Structural Support*, 1st Edition, Copyright 2001 by the Deep Foundation Institute (DFI).

2.5 Post Tensioning Institute (PTI):

2.5.1 *Recommendations for Prestressed Rock and Soil Anchors*, Third Edition, Copyright 1996 By the Post-Tensioning Institute.

2.6 Society of Automotive Engineers (SAE):

2.6.1 SAE J429 Mechanical and Material Requirements for Externally Threaded Fasteners.

3 SUBMITTALS

3.1 Construction Submittals

3.1.1 The Contractor or Engineer shall prepare and submit to the Owner, for review and approval, working drawings and design calculations for the HELICAL PULLDOWN™ Micropile foundation intended for use at least 14 calendar days prior to planned start of construction (but note also Paragraph 3.1.9). All submittals shall be signed and sealed by a Registered Professional Engineer currently licensed in the State/Province of _____.

3.1.2 The Contractor shall submit a detailed description of the construction procedures proposed for use to the Owner for review. This shall include a list of major equipment to be used.

3.1.3 The Working Drawings shall include the following:

3.1.3.a HPM number, location and pattern by assigned identification number
3.1.3.b HPM design load
3.1.3.c Type and size of central steel shaft

Type SS5/SS150 – 1-1/2" RCS, Type SS175 – 1-3/4" RCS, Type SS200 – 2" RCS, Type SS225 – 2-1/4" RCS, Type RS3500.300 – 3-1/2" OD pipe.

3.1.3.d Helix configuration (number and diameter of helical plates)
3.1.3.e Minimum effective installation torque
3.1.3.f Displacement plates/centralizers and their location
3.1.3.g Minimum overall length
3.1.3.h Inclination of HPM
3.1.3.i Grout column length
3.1.3.j Minimum cased length, if applicable
3.1.3.k Grout column diameter(s)
3.1.3.l Cut-off elevation
3.1.3.m HPM attachment to structure relative to grade beam, column pad, etc.

If the number of helical plates per HPM required for the project is not shown on the Working Drawings, the Contractor shall have the option of performing subsurface tests using methods subject to the review and acceptance of the Owner. The data collected along with other information pertinent to the project site shall be used to determine the required helix configuration.

3.1.4 The Contractor shall submit shop drawings for all HPM components, including casing components and pile top attachment to the Owner for review and approval. This includes HPM lead and extension section identification (manufacturer's catalog numbers).

Shop drawings for HPM components, including pile top attachments, can be obtained from A. B. Chance, their certified Distributors, or directly from www.abchance.com.

3.1.5 If required, the Contractor shall submit certified mill test reports for the central steel shaft, as the material is delivered, to the Owner for record purposes. The ultimate strength, yield strength, % elongation, and chemistry composition shall be provided.

3.1.6 The Contractor shall submit the grout materials to be used, and the means for mixing and placing the grout to the Owner for approval. This submittal shall include technical data that is representative of typical values.

Technical data for grout materials are available from the manufacturer. Typical properties provided are compressive strength, density, flow, expansion/shrinkage, working time, and yield. Grout used for HELICAL PULLDOWN™ Micropiles typically contains Portland cement, silica fume and other additives.

3.1.7 The Contractor shall submit plans for pre-production (optional) and production testing for the HPMs to the Owner for review and acceptance prior to beginning load tests. The purpose of the test is to determine the load versus displacement response of the HELICAL PULLDOWN™ Micropile and provide an estimation of ultimate capacity.

It is the responsibility of the structural engineer of record to establish acceptance criteria for HPM verification load tests, which can be incorporated into the project specific specification. Load testing also provides the means to verify the empirical ratio between the ultimate capacity and the average installing torque of the HPM for a specific project site.

3.1.8 The Contractor shall submit to the Owner copies of calibration reports for each torque indicator and all load test equipment to be used on the project. The calibration tests shall have been performed within one year of the date submitted. HPM installation and testing shall not proceed until the Owner has received the calibration reports. These calibration reports shall include, but are not limited to, the following information:

3.1.8.a Name of project and Contractor
3.1.8.b Name of testing agency
3.1.8.c Identification (serial number) of device calibrated
3.1.8.d Description of calibrated testing equipment
3.1.8.e Date of calibration
3.1.8.f Calibration data

Load test equipment includes load cylinders, pressure gauges, and load transducers. A. B. Chance Mechanical Dial Torque Indicator (SKU C303-1340) is calibrated prior to final assembly. Its torsion bar design eliminates the need for annual re-calibration.

3.1.9 Work shall not begin until all the submittals have been received and approved by the Owner. The Contractor shall allow the Owner a reasonable time to review, comment, and return the submittal package after a complete set has been received. All costs associated with incomplete or unacceptable submittals shall be the responsibility of the Contractor.

3.2 Installation Records (see page 35 for sample Installation Log)

The Contractor shall provide the Owner copies of HPM installation records within 24 hours after each installation is completed. Records shall be prepared in accordance with the specified division of responsibilities as noted in Table-1. Formal copies shall be submitted on a weekly basis. These installation records shall include, but are not limited to, the following information:

3.2.1 Name of project and Contractor
3.2.2 Name of Contractor's supervisor during installation
3.2.3 Date and time of installation
3.2.4 Name and model of installation equipment
3.2.5 Type of torque indicator used
3.2.6 Location of HPM by assigned identification number
3.2.7 Actual HPM type and configuration – including lead section (number and size of helical plates), number and type of extension sections (manufacturer's SKU numbers)
3.2.8 HPM installation duration and observations
3.2.9 Total length of installed HPM
3.2.10 Cut-off elevation
3.2.11 Inclination of HPM
3.2.12 Installation torque at one-foot intervals for the final 10 feet
3.2.13 Grout quantities pulled-down on a per section basis
3.2.14 Actual grout column diameter and length
3.2.15 Comments pertaining to interruptions, obstructions, or other relevant information
3.2.16 Rated load capacities

3.3 Test Reports (see page 36 for sample Test Report Log)

The Contractor shall provide the Owner copies of field test reports within 24 hours after completion of the load tests. Records shall be prepared in accordance with the specified division of responsibilities as noted in Table-1. Formal copies shall be submitted within a reasonable amount of time following test completion. These test reports shall include, but are not limited to, the following information (note Section 6 – Pile Load Tests):

3.3.1 Name of project and Contractor
3.3.2 Name of Contractor's supervisor during installation
3.3.3 Name of third party test agency, if required
3.3.4 Date, time, and duration of test
3.3.5 Location of HPM by assigned identification number
3.3.6 Type of test (i.e. tension or compression)
3.3.7 Description of calibrated testing equipment and test set-up

3.3.8 Actual HPM type and configuration – including lead section, number and type of extension sections (manufacturer's SKU numbers)
3.3.9 Steps and duration of each load increment
3.3.10 Cumulative pile-head movement at each load step
3.3.11 Comments pertaining to test procedure, equipment adjustments, or other relevant information
3.3.12 Signed by third party test agency rep., registered professional engineer, or as required by local jurisdiction

3.4 Closeout Submittals

3.4.1 Warranty: Warranty documents specified herein
3.4.1.a Project Warranty: Refer to Conditions of the Contract for project warranty provisions

Coordinate the warranty period stated herein with the project warranty as stated in the Contract documents.

Warranty Period: (*Specify Term*) years commencing on date of Substantial Completion

3.4.1.b Manufacturer's Warranty: Submit, for Owner's Acceptance, manufacturer's standard warranty document executed by authorized company official. Manufacturer's warranty is in addition to, and not a limitation of, other rights the Owner may have under Contract Document.

4 PRODUCTS AND MATERIALS

4.1 Central Steel Shaft:

The central steel shaft, consisting of lead sections, helical extensions, and plain extensions, shall be Type SS or RS3500.300 as manufactured by the A. B. Chance Company (Centralia, MO).

4.1.1 *SS5 1-1/2" Material*: Shall be hot rolled Round-Cornered-Square (RCS) solid steel bars meeting dimensional and workmanship requirements of ASTM A29. The bar shall be modified medium carbon steel grade (similar to AISI 1044) with improved strength due to fine grain size.

4.1.1.a Torsional strength rating = 5,700 ft-lb
4.1.1.b Minimum yield strength = 70 ksi

4.1.2 *SS150 1-1/2"; SS175 1-3/4"; SS200 2"; SS225 2-1/4" Material*: Shall be hot rolled Round-Cornered-Square (RCS) solid steel bars meeting the dimensional and workmanship requirements of ASTM A29. The bar shall be High Strength Low Alloy (HSLA), low to medium carbon steel grade with improved strength due to fine grain size.

4.1.2.a Torsional strength rating: SS150 = 7,000 ft-lb; SS175 = 10,500 ft-lb; SS200 = 16,000 ft-lb; SS225 = 21,000 ft-lb
4.1.2.b Minimum yield strength = 90 ksi

4.1.3 *RS3500.300 3-1/2" OD Material*: Shall be structural steel tube or pipe, seamless or straight-seam welded, per ASTM A53, A252, ASTM A500, or ASTM A618. Wall thickness is 0.300" (schedule 80).

4.1.3.a Torsional strength rating = 13,000 ft-lb
4.1.3.b Minimum yield strength = 50 ksi

4.2 Helical Bearing Plate:

Shall be hot rolled carbon steel sheet, strip, or plate formed on matching metal dies to true helical shape and uniform pitch. Bearing plate material shall conform to the following ASTM specifications:

4.2.1 *SS5 Material*: Per ASTM A572, or A1018, or A656 with minimum yield strength of 50 ksi. Plate thickness is 3/8".
4.2.2 *SS150 and SS175 Material*: Per ASTM A656 or A1018 with minimum yield strength of 80 ksi. Plate thickness is 3/8".
4.2.3 *SS200 and SS225 Material*: Per ASTM A656 or A1018 with minimum yield strength of 80 ksi. Plate thickness is 1/2".
4.2.4 *RS3500.300 Material*: Per ASTM A36, or A572, or A1018, or A656, depending on helix diameter, per the minimum yield strength requirements cited above. Plate thickness is 3/8".

4.3 Bolts:

The size and type of bolts used to connect the central steel shaft sections together shall conform to the following ASTM specifications:

4.3.1 *SS5 and SS150 1-1/2" Material*: 3/4" diameter bolt per ASTM A320 Grade L7.
4.3.2 *SS175 1-3/4" Material*: 7/8" diameter bolt per ASTM A193 Grade B7.
4.3.3 *SS200 2" Material*: 1-1/8" diameter bolt per ASTM A193 Grade B7.
4.3.4 *SS225 2-1/4" Material*: 1-1/4" diameter bolt per ASTM A193 Grade B7.
4.3.5 *RS3500.300 3-1/2" OD Material*: 3/4" diameter bolts (3 per coupling) per SAE J429 Grade 5.

4.4 Couplings:

Shall be formed as integral part of the plain and helical extension material. For Type SS material, the couplings shall be hot upset forged sockets. For Type RS3500.300 material, the couplings shall be hot forge expanded sockets.

4.5 Displacement Plates/Centralizers

Displacement plates (lead or extension plates) shall be fabricated from steel or other material (not wood) that will not affect the structural integrity of the central steel shaft or grout column.

4.6 Plates, Shapes, or Pier Caps:

Structural steel plates and shapes for HPM top attachments shall conform to ASTM A36 or ASTM A572 Grade 50.

4.7 Pipe/Casing:

If steel casing is relied upon to carry compression or lateral loads, or to stiffen the HPM, the casing/pipe shall conform to the ASTM specifications as cited in paragraph 4.7.1. If PVC casing is relied upon for grout containment, fissured or void-filled soils, or as a bond breaker, the casing/pipe shall conform to the ASTM specifications as cited in paragraph 4.7.2.

4.7.1 Shall meet or exceed the physical and general requirements of ASTM A53 Type E or S Grade B, A252 Grade 2, A500 Grade B, or ASTM A618.
4.7.2 Shall meet the physical and general requirements of ASTM D1784, D1785, and D3034.

4.8 Water

Water for mixing grout shall be potable, clean and free from impurities, which may be detrimental to grout or steel. Potable water shall be available in quantities sufficient to mix grout and for equipment clean-up.

4.9 Cement

Cement for HELICAL PULLDOWN™ Micropile grout shall be Portland cement conforming to ASTM C150 Type I or Type II. Pre-packaged, non-shrink cement grouts shall be subject to the review and acceptance of the Owner, and shall conform to the requirements of ASTM C1107.

4.10 Admixtures

Admixtures are generally not required for PULLDOWN™ Micropile grouts. However, project specific soil conditions and loads may require high performance grout properties attainable with admixtures. For example, silica fume resists segregation and washout by improving bond between the cement particles. Its small particle size and shape improves flowability and reduces porosity – which leads to durable, high strength grout with increased chemical and electrical resistance. Fly ash improves pumpability, improves compressive strength, and reduces grout cost.

Chemical admixtures for grout shall conform to the requirements of ASTM C494. Chemical admixtures which control bleed water, improve consistency, reduce water/cement ratio, and retard set may be used in the grout subject to the review and acceptance of the Owner. Expansive admixtures can be used to fill confined areas of the central steel shaft coupling joints, or to compensate for drying shrinkage. Accelerators shall not be permitted. Chemical admixtures, if used, shall be compatible with the central steel shaft and mixed in accordance with the grout manufacturer's recommendations.

Mineral admixtures for grout shall conform to the requirements of ASTM C618 (coal fly ash) or C1240 (silica fume). Mineral admixtures, which provide thixotropic consistency, reduce porosity, increase compressive strength, and resist segregation may be used in the grout subject to the review and acceptance of the Owner. Mineral admixtures, if used, shall be compatible with the central steel shaft and mixed in accordance with the grout manufacturer's recommendations.

Grout specimen testing is generally not required for production piles, but is required for pre-production tests to evaluate the quality and strength of the grout mix. If required, a strength test shall be the average of the strength of two specimens made from the same sample of grout as used for production HPMs and tested at 28 days or at the test age designated for determination of compressive strength. The specimens shall be made and cured under field conditions in accordance with ASTM C31 and tested in accordance with ASTM C39.

4.11 Aggregate

Sand fillers may be used in the grout mix as an extender with large diameter grout columns, subject to the approval of the Owner. Use fine sand only. Medium or coarse sand shall not be permitted. Small diameter grout columns shall not include aggregate.

4.12 Corrosion Protection (Optional)

The corrosion protection requirements, if any, are identified in Section 1.8.7. The Specifier may elect to delete this section entirely if no corrosion protection materials are required such as for compression piles in non-aggressive ground.

4.12.1 Epoxy Coating: If used, the thickness of coating applied electrostatically to the central steel shaft shall be 7-12 mils. Epoxy coating shall be in accordance with ASTM A775. Bend test requirements are not required. Coupling bolts, nuts, and displacement plates are not required to be epoxy coated.

4.12.2 Galvanization: If used, all A. B. Chance Type SS material shall be hot-dipped galvanized in accordance with ASTM A153 after fabrication. All A. B. Chance Type RS3500.300 material shall be hot-dipped galvanized in accordance with ASTM A123 after fabrication.

5 EXECUTION

5.1 Site Conditions

5.1.1 Prior to commencing HELICAL PULLDOWN™ Micropile installation, the Contractor shall inspect the work of all other trades and verify that all said work is completed to the point where HPMs may commence without restriction.

5.1.2 The Contractor shall verify that all HPMs may be installed in accordance with all pertinent codes and regulations regarding such items as underground obstructions, right-of-way limitations, utilities, etc.

5.1.3 In the event of a discrepancy, the Contractor shall notify the Owner. The Contractor shall not proceed with HPM installation in areas of discrepancies until said discrepancies have been resolved. All costs associated with unresolved discrepancies shall be the responsibility of the Owner.

5.2 Installation Equipment

5.2.1 Shall be rotary type, hydraulic power driven torque motor with clockwise and counter-clockwise rotation capabilities. The torque motor shall be capable of continuous adjustment to revolutions per minute (RPM's) during installation. Percussion drilling equipment shall not be permitted. The torque motor shall have torque capacity 15% greater than the torsional strength rating of the central steel shaft to be installed.

Helical screw piers should be installed with high torque, low RPM torque motors, which allow the helical screw plates to advance with minimal soil disturbance.

5.2.2 Equipment shall be capable of applying adequate down pressure (crowd) and torque simultaneously to suit project soil conditions and load requirements. The equipment shall be capable of continuous position adjustment to maintain proper HPM alignment.

5.3 Installation Tooling

5.3.1 Shall consist of a Kelly Bar Adapter (KBA) and Type SS or RS3500.300 drive tool as manufactured by A. B. Chance Company and used in accordance with the manufacturer's written installation instructions.

Installation tooling should be maintained in good working order and safe to operate at all times. Flange bolts and nuts should be regularly inspected for proper tightening torque. Bolts, connecting pins, and retainers should be periodically inspected for wear and/or damage and replaced with identical items provided by the manufacturer. Heed all warning labels. Worn or damaged tooling should be replaced.

5.3.2 A torque indicator shall be used during HPM installation. The torque indicator can be an integral part of the installation equipment or externally mounted in-line with the installation tooling. Torque indicators are available from A. B. Chance Company.

5.3.2.a Shall be capable of providing continuous measurement of applied torque throughout the installation.

5.3.2.b Shall be capable of torque measurements in increments of at least 500 ft-lb

5.3.2.c Shall be calibrated prior to pre-production testing or start of work. Torque indicators which are an integral part of the installation equipment, shall be calibrated on-site. Torque indicators which are mounted in-line with the installation tooling, shall be calibrated either on-site or at an appropriately equipped test facility. Indicators that measure torque as a function of hydraulic pressure shall be calibrated at normal operating temperatures.

5.3.2.d Shall be re-calibrated, if in the opinion of the Owner and/or Contractor reasonable doubt exists as to the accuracy of the torque measurements.

5.4 Installation Procedures

5.4.1 <u>*Central Steel Shaft:*</u>

5.4.1.a The HPM installation technique shall be such that it is consistent with the geotechnical, logistical, environmental, and load carrying conditions of the project.

5.4.1.b The lead section shall be positioned at the location as shown on the working drawings. Battered HPMs can be positioned perpendicular to the ground to assist in initial advancement into the soil before the required batter angle shall be established. The HPM sections shall be engaged and advanced into the soil in a smooth, continuous manner at a rate of rotation of 5 to 20 RPM's. Extension sections shall be provided to obtain the required minimum overall length and installation torque as shown on the working drawings. Connect sections together using coupling bolt and nut torqued to 40 ft-lb

5.4.1.c Sufficient down pressure shall be applied to uniformly advance the HPM sections approximately 3 inches per revolution. The rate of rotation and magnitude of down pressure shall be adjusted for different soil conditions and depths.

5.4.1.d A lead displacement plate (LDP) of appropriate diameter shall be positioned on the central steel shaft at the location necessary to install the grout column as shown on the working drawings. The LDP shall not be located closer than 12 inches above the top helical plate. Additional LDP's or extension displacement plates (EDP) shall be positioned on the central steel shaft at regular intervals – typically at every coupling joint. Displacement plates shall not be spaced more than 7-ft. apart. Displacement plates shall permit the free flow of grout without misalignment of the central steel shaft.

5.4.2 *Grout*

5.4.2.a Grout shall be mixed with equipment capable of providing a steady supply at the required level of production. The water – cement ratio for neat cement grouts is typically between 0.4 and 0.5. When using a pre-packaged grout, the recommended water-cement ratios listed in the mixing instructions on the package shall be followed.

Typical water-cement ratio for pre-mixed microsil grouts is 0.2 - 0.3. Over-watering will result in reduced compressive strengths, increased shrinkage, and reduced physical properties. Best results are obtained when the grout is mixed with colloidal or high shear mixers, which provide complete wetting of the cement particles.

5.4.2.b The grout shall be placed via a gravity fed reservoir located at the surface. The reservoir shall consist of a temporary casing or form, which is capable of containing liquid grout. The reservoir shall be appropriately sized (diameter and length) to accommodate the soil conditions and grout column diameter. The grout shall be placed in reservoir immediately prior to the advancement of the first LDP into the soil. The volume of grout contained in the reservoir shall be maintained at a level sufficient to maintain positive hydrostatic pressure on the grout column.

5.4.2.c Grout placement shall continue until the minimum grout column length has been achieved as shown on the working drawings. Volume measurements shall be taken throughout the installation in order to determine the actual grout column diameter.

5.4.2.d Grout shall be allowed to attain the minimum design strength prior to being loaded.

5.4.3 *Casing*

5.4.3.a If required, casing shall be installed in segments corresponding to the sections of the central steel shaft.

5.4.3.b The casing shall be advanced into the soil via direct connection with lead and extension displacement plates.

5.4.3.c Each casing segment shall be filled with grout immediately after placement.

Vertically installed HELICAL PULLDOWN™ Micropiles subjected to lateral loads may require steel casing reinforcement. The lateral load analysis as detailed in Section 1.8.4 of the specification can be used to determine the required diameter and length of the steel case reinforcement.

5.5 Termination Criteria

5.5.1 The torque as measured during the installation shall not exceed the torsional strength rating of the central steel shaft.

5.5.2 The minimum installation torque and minimum overall length criteria as shown on the working drawings shall be satisfied prior to terminating the HELICAL PULLDOWN™ Micropile.

5.5.3 If the torsional strength rating of the central steel shaft and/or installation equipment has been reached prior to achieving the minimum overall length required, the Contractor shall have the following options:

5.5.3.a Terminate the installation at the depth obtained subject to the review and acceptance of the Owner, or:

5.5.3.b Remove the existing HPM and install a new one with fewer and/or smaller diameter helical plates. The new helix configuration shall be subject to review and acceptance of the Owner. If re-installing in the same location, the top-most helix of the new HPM shall be terminated at least (3) three feet beyond the terminating depth of the original HPM.

It is generally not recommended to re-use HPM shaft material after it has been permanently twisted during a previous installation.

5.5.4 If the minimum installation torque as shown on the working drawings is not achieved at the minimum overall length, and there is no maximum length constraint, the Contractor shall have the following options:

5.5.4.a Install the HPM deeper using additional extension sections, displacement plates, casing if required, and grout, or:

5.5.4.b Remove the existing HPM and install a new one with additional and/or larger diameter helical plates. The new helix configuration shall be subject to review and acceptance of the Owner. If re-installing in the same location, the top-most helix of the new HPM shall be terminated at least (3) three feet beyond the terminating depth of the original HPM.

5.5.4.c De-rate the load capacity of the HPM and install additional pile(s). The de-rated capacity and additional pile location shall be subject to the review and acceptance of the Owner.

5.5.5 If the HPM is refused or deflected by a subsurface obstruction, the installation shall be terminated and the pile removed. The obstruction shall be removed, if feasible, and the HPM re-

installed. If obstruction can't be removed, the HPM shall be installed at an adjacent location, subject to review and acceptance of the Owner.

5.5.6 The average torque for the last three feet of penetration shall be used as the basis of comparison with the minimum installation torque as shown on the working drawings. The average torque shall be defined as the average of the last three readings recorded at one-foot intervals.

The average torque can be empirically related to the HPM's ultimate capacity in end-bearing. This well-known attribute of screw piers can be used as a production control method to indicate the pile's end-bearing capacity.

6 MICROPILE LOAD TESTS

6.1 Pre-Production Pile Tests (Optional)

Load tests shall be performed to verify the suitability and capacity of the proposed HELICAL PULLDOWN™ Micropile, and the proposed installation procedures prior to installation of production piles. _____ sacrificial test piles with reaction anchors shall be constructed immediately prior to the start of work on the production HPMs. The Owner shall determine the number of pre-production test piles, their location, acceptable load and movement criteria, and the type(s) of load direction (i.e., tension, compression, or both). Additional purpose of pre-production tests is to empirically verify the ultimate capacity to the average installing torque of the screw pier foundation for the project site.

Pre-production pile installation methods, procedures, equipment, and overall length shall be identical to the production piles to the extent practical except where approved otherwise by the Owner.

The Contractor shall submit for review and acceptance the proposed HPM load testing procedure. The pre-production test proposal shall be in general conformance with ASTM D1143 and/or D-3689, and shall provide the minimum following information:

- Type and accuracy of load equipment
- Type and accuracy of load measuring equipment
- Type and accuracy of pile-head deflection equipment
- General description of load reaction system, including description of reaction anchors
- Calibration report for complete load equipment, including hydraulic jack, pump, pressure gauge, hoses, and fittings.

The following test procedure shall be considered to meet the minimum requirements. It is not intended to preclude local building codes, which may mandate other requirements, such as full 24-hour load tests.

If the pre-production test fails to meet the design requirements, the Contractor shall modify the HPM design and/or installation methods and retest the modified pile, as directed by the Owner. *For prescriptive specifications, the Engineer will define the appropriate modifications.*

6.2 Load Test Procedures

The hydraulic jack shall be positioned at the beginning of the test such that the unloading and repositioning of the jack during the test shall not be required. The jack shall also be positioned co-axial with respect to the pile-head so as to minimize eccentric loading. The hydraulic jack shall be capable of applying a load not less than two times the proposed design load (DL).

An alignment load (AL) shall be applied to the HPM prior to setting the deflection measuring equipment to zero or a reference position. The AL shall be no more than 10% of the design load (i.e., 0.1 DL). After AL is applied, the test set-up shall be inspected carefully to ensure it is safe to proceed.

Axial pile load tests shall be conducted by loading the HPM in step-wise fashion as shown in Table-3 to the extent practical. Pile-head deflection shall be recorded at the beginning of each step and after the end of the hold time. The beginning of the hold time shall be defined as the moment when the load equipment achieves the required load step.

Test loads shall be applied until continuous jacking is required to maintain the load step or until the test load increment equals 200% of the design load (DL) (i.e., 2.0 DL), whichever occurs first. The observation period for this last load increment shall be 10 minutes. Displacement readings shall be recorded at 1, 2, 3, 4, 5 and 10 minutes (load increment maxima only).

The applied test load shall be removed in four approximately equal decrements per the schedule in Table-3. The hold time for these load decrements shall be 1 minute, except for the last decrement, which shall be held for 5 minutes.

This cyclic loading method will permit the analyses of the total, elastic, and net movements, since they can be separated and studied. For special test piles not to be used later in service, further load cycles may be conducted to provide an estimation of the ultimate capacity.

Table-3. Steps for Pre-Production Load Testing

LOAD STEP	HOLD TIME (MINUTES)
AL	2.5 Min.
0.20 DL	2.5 Min.
0.40 DL	2.5 Min.
0.50 DL	2.5 Min.
0.20 DL	1.0 Min.
AL	1.0 Min.
0.40 DL	1.0 Min.
0.60 DL	2.5 Min.
0.80 DL	2.5 Min.
1.0 DL	2.5 Min.
0.5 DL	1.0 Min.
0.2 DL	1.0 Min.
AL	1.0 Min.
0.5 DL	1.0 Min.
1.0 DL	1.0 Min.
1.2 DL	2.5 Min.
1.4 DL	2.5 Min.
1.6 DL	2.5 Min.
1.8 DL	2.5 Min.
2.0 DL	10 Min.
1.5 DL	1.0 Min
1.0 DL	1.0 Min
0.5 DL	1.0 Min
AL	5.0 Min

AL = Alignment Load; DL = Design Load

6.3 Acceptance Criteria for HPM Verification Load Tests

Both of the following criteria must be met for approval:

1. The HPM shall sustain the compression and tension design capacities (1.0 DL) with no more than ____ in. (mm) total vertical movement of the pile-head as measured relative to the top of the HPM prior to the start of testing.
2. Failure does not occur at the 2.0 DL maximum compression and tension test loads. The failure load shall be defined by one of the following definitions – whichever results in the lesser load:
   - The point at which the movement of the HPM tip exceeds the elastic compression/tension of the pile shaft by 0.08 B, where B is defined as the diameter of the largest helix. *(Note that tension loads are limited to the minimum ultimate tensile strength of the coupling joint(s) of the central steel shaft. It is recommended to use the minimum ultimate tensile strengths as published by A. B. Chance Company (shown in Table-A of the Appendix).*
   - The point at which the slope of the load versus deflection (at end of increment) curve exceeds 0.05 inches/kip.

The Contractor shall provide the Owner copies of field test reports confirming HPM configuration and construction details within 24 hours after completion of the load tests. Formal copies shall be submitted as per Section 3.3. This written documentation will either confirm the load capacity as required on the working drawings or propose changes based upon the results of the pre-production tests.

When a HPM fails to meet the acceptance criteria, modifications shall be made to the design, the construction procedures, or both. These modifications include, but are not limited to, de-rating the HPM load capacity, modifying the installation methods and equipment, increasing or decreasing the grout column diameter, increasing the minimum effective installation torque, changing the helix configuration, increasing the grout column length, or changing the HPM material (i.e., central steel shaft, grout mix, etc.). Modifications that require changes to the structure shall have prior review and acceptance of the Owner. The cause for any modifications of design or construction procedures shall be decided in order to determine any additional cost implications.

6.4 Production Pile Testing

(This may be the only type of load test conducted, depending on project conditions.)

The Contractor shall perform proof tests on a minimum of ___% of the total production HPMs. The piles to be tested will be selected by the Owner. At the Contractor's suggestion, but with the Owner's permission, tension tests may be performed in lieu of compression tests up to 1.00 DL for HPMs with sufficient structural tension capacity. *The requirements of Table-4 may be regarded as a minimum, however, it is not recommended to test production piles to values of up to 2.0 DL unless the pile's failure load is significantly higher than 2.0 DL. The maximum production pile test load shall be determined by the Owner. For example, ASTM D1143 stipulates testing to 2.0 DL.*

The test sequence shall be as shown in Table-4 to the extent practical.

Table-4. Steps for Production Load Testing

LOAD STEP	HOLD TIME (MINUTES)
AL	0 Min.
0.20 DL	2.5 Min.
0.40 DL	2.5 Min.
0.60 DL	2.5 Min.
0.80 DL	2.5 Min.
1.00 DL	5 Min.
0.60 DL	1 Min.
0.40 DL	1 Min.
0.20 DL	1 Min.
AL	5 Min.

AL = Alignment Load; DL = Design Load

The acceptance criteria for production piles shall be per Section 6.3 Item 1.

If a production HPM that is tested fails to meet the acceptance criteria, the Contractor shall be directed to proof test another HPM in the vicinity. For failed piles and further construction of other piles, the Contractor shall modify the design, the construction procedure, or both. These modifications include, but are not limited to, installing replacement HPMs, modifying the installation methods and equipment, increasing or decreasing the grout column diameter, increasing the minimum effective installation torque, changing the helix configuration, increasing the grout column length, or changing the HPM material (i.e., central steel shaft, grout mix, etc.). Modifications that require changes to the structure shall have prior review and acceptance of the Owner. Any modifications of design or construction procedures shall be at the Contractor's expense.

6.5 Lateral Testing

If required, lateral load tests shall be conducted in accordance with ASTM D3966. If a production pile is to be lateral load tested, care must be taken not to cause permanent damage – which can reduce its axial load capacity. The acceptance criteria as selected by the Owner, typically expressed as a maximum total movement at a specific load, must be realistic in its magnitude so as not to potentially damage the structure. It is suggested that lateral loads be resisted through some other means, such as soil anchors, battered piles, or enlarged concrete pile caps/grade beams.

7 MEASUREMENT AND PAYMENT

HPM work can be paid for in different ways, reflecting the relative risk to be accepted by the Owner and the Contractor. However, the following items are common and standard.

QUANTITY	DESCRIPTION	UNIT
1	Mobilization/Demobilization	Lump sum
1	Conduct pre-production test pile program of declared scope	Lump sum
	Test Production Pile	Per pile
-	Obstructions	Per hour or Force Account
As required	HPM Installation	As below

- *Per Unit Length*: HPMs meeting the design capacity shall be paid for per lineal foot below grade.
- *Per Pile*: HPMs meeting the design capacity shall be paid for on a "per pile" basis (no allowance for changes in length relative to that originally bid).
- *Per Pile with Add/Deduct*: HPMs meeting the design capacity shall be paid for on a "per pile" basis, with a predetermined length, and an add/deduct amount per lineal foot to accommodate field changes.
- *Lump Sum*: The whole HPM project shall be paid for on a "lump sum" basis (no allowance for changes due to additional pile length relative to that originally bid).

END OF SPECIFICATION

APPENDIX

TABLE A
Hubbell Power Systems, Inc./CHANCE
Mechanical Strength Ratings – Helical Screw Piles

RATING TYPE	CENTRAL STEEL SHAFT FAMILY					
	SS5 1-1/2" RCS	SS150 1-1/2" RCS	SS175 1-3/4" RCS	SS200 2" RCS	SS225 2-1/4" RCS	RS3500.300 3-1/2" O.D Pipe
Torsional Strength Rating (ft-lb)	5,500	7,000	10,500	16,000	21,000	13,000
Ultimate Tension Capacity for Axially Loaded Pile (kip)	70	70	100	150	200	100

NOTE: Actual installed capacities are dependent on existing soil conditions.

APPENDIX

TABLE B
Guidance of Ground Aggressiveness Classification

Soil tests may be performed to measure the aggressiveness of the soil environment, especially if field observations indicate corrosion of existing structures. The most common and simplest tests are for electrical resistivity, pH, chloride, and sulfates. The designation for these tests and the critical values defining whether an aggressive soil environment exists, are as shown below. Per FHWA-RD-89-198, the ground is considered aggressive if any one of these indicators shows critical values.

Property	Test Designation	Critical Values
Resistivity	ASTM G 57 AASHTO T-288	below 2,000 ohm-cm
pH	ASTM G 51 AASHTO T-289	below 5
Sulfate	ASTM D 516M ASTM D 4327	above 200 ppm
Chloride	ASTM D 512 ASTM D 4327 AASHTO T-291	above 100 ppm
Organic Content	AASHTO T-267	1% max

HELICAL PULLDOWN™ Micropile Installation Log

Page(s):_____ of _____

Project Name: _____

Contractor: _____

Name & Model of Installation Equip: _____

Project No:_____

Project Address:

_____

_____

_____

Project Type:_____

(New Construction/Remedial Repair)

Termination/Bracket:_____

On-Site Supervisor: _____

Total Length of HPM: _____

Inclination of HPM: _____

Comments: _____

_____

_____

Date: _____

Time: _____

Time to Install: _____

Micropile Location No: _____

Shaft Type/Size:_____

_____

_____

Helix Configuration: _____

Grout Column Diameter: _____ (inches):

Sleeve/Unsleeved (circle)

Sleeve Depth: _____ (feet)

Torque Indicator Type: _____

Cut-off Elevation: _____

Micropile Installation

Depth (feet)	Torque (ft-lb)	Grout Flow (volume/shaft length)

Depth (feet)	Torque (ft-lb)	Grout Flow (volume/shaft length)

A. B. CHANCE CO.

WORKSHEET FOR AXIAL COMPRESSION/TENSION LOAD TEST
HELICAL PULLDOWN™ Micropiles

PROJECT NAME: _____
CONTRACTOR: _____
ON-SITE SUPERVISOR (during installation): _____
TEST AGENCY (if required): _____
HPM SHAFT TYPE/SIZE: _____
_____
HELIX CONFIGURATION: _____
GROUT COLUMN DIA: _____ **SLEEVE/UNSLEEVED (DIA):** _____
DESCRIPTION OF TEST EQUIP & SET-UP: _____
_____
_____
LOAD SCHEDULE: _____
COMMENTS: _____
_____
_____

SHEET __ **OF** __ **:**
DATE OF TEST: _____
TIME: _____
DURATION OF TEST: _____
MICROPILE LOCATION No: _____
TYPE OF TEST: (TENSION OR COMPRESSION)
_____
TESTED BY: _____
_____
_____
OBSERVED BY: _____
_____
_____
AUTHORIZED SIGNATURE: _____
_____

JACK PRESSURE (PSI)	APPLIED LOAD (KIPS)	TIME ELAPSED (MIN.)	DIAL INDICATOR READINGS								ALL DIALS AVERAGE DEFLECTION (IN.)	TRANSIT SCALE READING (IN.)	DEFLECTION (IN.)
			DIAL A		DIAL B		DIAL C		DIAL D				
			READING (IN.)	DEFLECTION (IN.)	READING (IN.)	DEFLECTION (IN.)	READING (IN.)	DEFLECTION (IN.)	READING (IN.)	DEFLECTION (IN.)			
0	0			0		0		0		0			0

GUIDE TO MODEL SPECIFICATION – CHANCE® Civil Construction HELICAL TIEBACK ANCHORS FOR EARTH RETENTION

TYPES OF SPECIFICATIONS

The three types of specifications that are used for HELICAL TIEBACK ANCHOR projects are:

Open Specifications: The Contractor is given the responsibility for the scope and design of the helical tieback anchor installation. In addition, the construction, capacity, and performance of the helical tieback anchor are the sole responsibility of the Contractor. This specification assumes that the Owner or Designer has provided the required structural loads. This specification type is most common for securing bids on temporary projects, and is not recommended for permanent applications.

Performance Specifications: The Contractor is given the responsibility for certain design and/or construction procedures, but must demonstrate to the Owner through testing and/or mutually agreed upon acceptance criteria that the production helical tiebacks meet or exceed the specified performance parameters. This specification assumes that the location and the required loads of the helical tieback anchor have been specified. The Contractor and Owner share the responsibility for the work.

Prescriptive Specifications: The Owner has the sole responsibility for the scope and design of the helical tieback anchor installation and specifies the procedures that must be followed. Prescriptive specifications mandate the Owner to be responsible for the proper performance of the production helical tieback anchors. The Contractor is responsible for fulfilling the obligations/details as specified in the construction documents.

Performance specifications are the most common and allow Contractors to use their unique installation methods and experience for any given site conditions. Owners receive the benefit of value engineering, which can result in lower costs.

The Owner, Designer, and Contractor will be jointly responsible for the design, installation, acceptance, and performance of the helical tieback anchor. The installation of a helical tieback requires specialized

©Copyright 2006 Hubbell, Inc.

equipment, techniques, and trained work crews. Every detail of the work cannot be specified, and every potential problem cannot be anticipated. Therefore, a contractor trained in the proper methods of design and installation of screw anchor tiebacks must be selected.

A list of the major tasks to be performed on a helical tieback anchor project is shown in Table-1 of the Model Specifications. The Owner or his representative should select the type of specification and procurement method. The responsible party for each task must be identified and mutually agreed upon at the earliest point in the contracting process. The completed Table-1 should be included in the construction documents. The process of continuous communication between all the parties involved is essential to achieve a satisfactory result. Clear communication and close cooperation are particularly important in the start-up phase and in testing. In addition, a timely preparation and review of all submittals is critical.

This model specification can be adapted to each of the three types of specifications. However, it is primarily written for the performance type. The identity of the "Contractor" and the "Owner" is always well defined, unlike that of the "Designer" or "Engineer". For example, the "Engineer" may be an employee(s) of the Contractor, or a third party consultant hired to secure a lower cost alternative during the bidding process. In contrast, the "Engineer" may be the Owner, an employee(s) of the Owner, or a representative hired by the Owner. It is recommended that the Engineer be a third party agency employed by the Owner to serve in the owner's best interests during the various stages of the contract.

For purposes of this Model Specification, the subject is a high capacity HELICAL TIEBACK ANCHOR manufactured by CHANCE Civil Construction. The helical tieback anchor consists of one or more helical bearing plates attached at the tip of a high strength central steel shaft. The central steel shaft consists of solid square shaft of various sections. Said shaft is connected to the wall face via thread-bar, bearing plate, and load nut.

It is suggested that the specification writer accurately and completely modify this model to suit his/her particular case.

Items in italics as such may be considered as "Commentary" and as such may be deleted or retained to suit the needs of the specification writer.

©Copyright 2006 Hubbell, Inc.

The following is list of general references that will provide additional background to HELICAL TIEBACK ANCHOR technology:

A. B. Chance Company, *HELICAL PIER® Foundation Systems, Technical Manual*, Bulletin 01-9601, Copyright 2000 Hubbell, 210 North Allen St., Centralia, MO 65240

Atlas Systems, Inc., *Technical Manual, 2005*, Copyright 2004 – Atlas Systems, Inc, 1026-B South Powell Road, Independence, MO 64056

Bobbitt, D.E., and Thorsten, Richard, *The Use of Helical Tieback Anchors for a Permanent Retaining Wall*, Bulletin 31-8902, Presented at the 1989 Foundation Congress – Northwestern University – Evanston, Illinois

Seider, Gary L., and Smith, Walter P., *Helical Tieback Anchors Help Reconstruct Failed Sheet Pile Wall*, Bulletin 31-9502, Presented at the 1995 46th Highway Geology Symposium – Charleston, West Virginia

Hoyt, R.M. and Clemence, S.P., 1989. Uplift Capacity of Helical Anchors in Soil. *Proceedings of the 12th International Conference on Soil Mechanics and Foundation Engineering*, Vol. 2, pp. 1019-1022.

Clemence, S.P., Thorsten, Richard E., and Edwards, Bill, *Helical Anchors: Overview of Application and Design,* Bulletin 31-9001, reprinted from ADSC *Foundation Drilling* Magazine, Copyright 1990 A. B. Chance Company, 210 North Allen St., Centralia, MO 65240

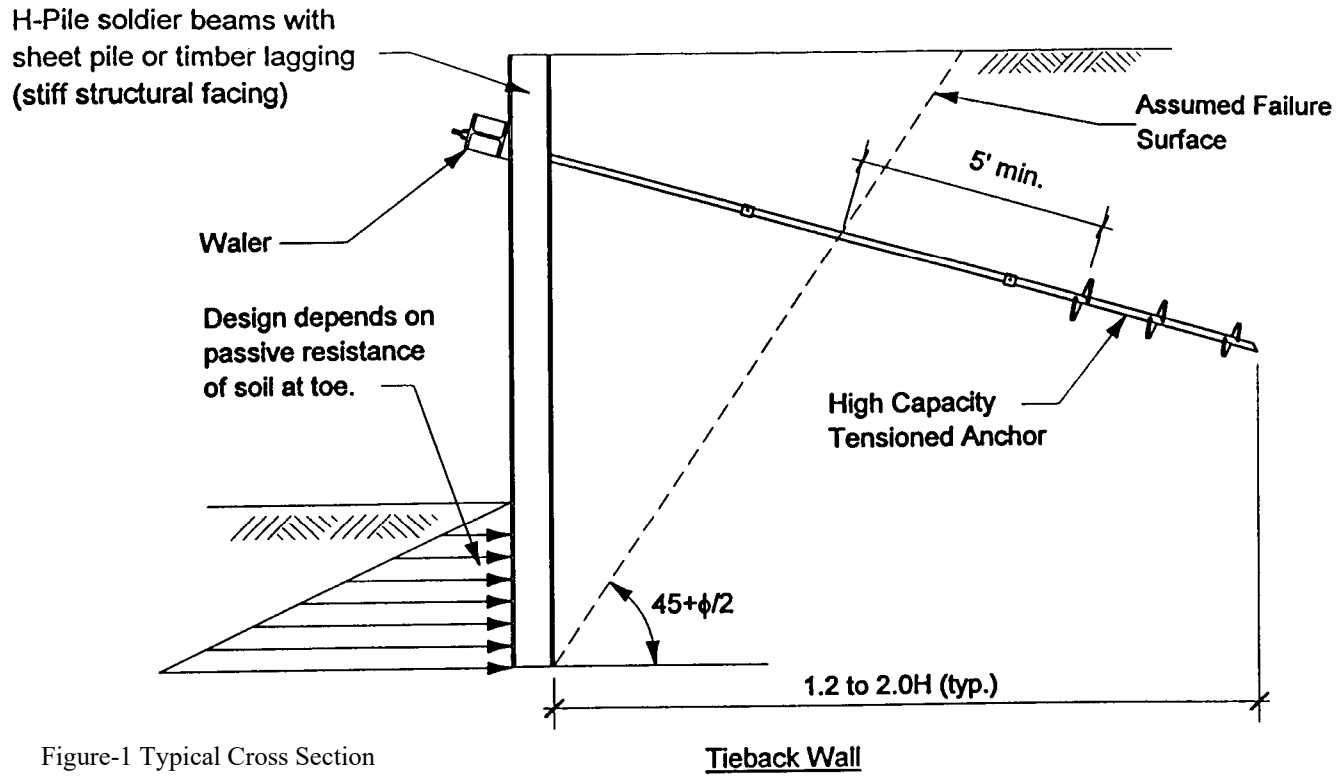

Figure-1 Typical Cross Section

©Copyright 2006 Hubbell, Inc.

CHANCE® Civil Construction
HELICAL TIEBACK ANCHORS

MODEL SPECIFICATION

1. GENERAL

1.1 Purpose of Specification

The purpose of this specification is to detail the furnishing of all designs, materials, tools, equipment, labor and supervision, and installation techniques necessary to install HELICAL TIEBACK ANCHORS as detailed on the drawings, including connection details. This shall include provisions for load testing that may be part of the scope of work

Specifier Note: This specification may require modification to account for unusual and/or unforeseen site and subsurface conditions and the particular circumstances of the project.

1.2 Scope of Work

This work consists of furnishing all necessary engineering and design services (if required), supervision, labor, tools, materials, and equipment to perform all work necessary to install the HELICAL TIEBACK ANCHORS, at (location, City, State/Province) for (Company, State or Private Authority) per the specifications described herein, and as shown on the drawings. The Contractor shall install a helical anchor that will develop the load capacities as detailed on the drawings. This may also include provisions for load testing to verify tieback capacity and deflection, if part of the scope of work. The responsibilities and duties of the respective parties for this project are summarized in Table-1.

©Copyright 2006 Hubbell, Inc.

Table-1. Tasks and Responsibilities to be Allocated for Helical Tieback Anchor Work

TASK		RESPONSIBLE PARTY*
1	Site Investigation, Geotechnical Investigation, Site Survey, and potential work restrictions	
2	Type of specification, requirement for a pre-contract testing program, and procurement method	
3	Obtaining easements	
4	Overall scope of work, design of the anchored structure – including design loads (vertical, horizontal, etc.), anchor locations, and anchor spacing and orientation	
5	Definition and qualification of safety factors	
6	Calculation/estimation of allowable structural and/or anchor movement in service (acceptance criteria)	
7	Definition of service life (temporary – months or permanent - years) and required degree of corrosion protection based on site conditions	
8	Type and number of tests (pre-contract, pre-production and production)	
9	Minimum total anchor length, depth to bearing stratum	
10	Helical Tieback Anchor components and details	
11	Details of corrosion protection, if required	
12	Details of anchor connection to structure (e.g., for static and seismic conditions)	
13	Preparation of Drawings and test reports	
14	Evaluation of test results	
15	Construction methods, schedule, sequencing, and coordination of work	
16	Requirements of field production control, including logging of installation torque vs. installed depth	
17	Supervision of work	
18	Long-term monitoring	

* To be filled in by specification writer.

1.3 Qualifications of the Helical Tieback Anchor Contractor

The helical anchor Contractor shall be experienced in performing design and construction of helical tieback anchors and shall furnish all materials, labor, and supervision to perform the work. The Contractor shall be trained by CHANCE® Civil Construction in the proper methods of design and installation of screw anchor tiebacks. The Contractor shall provide names of on-site personnel materially involved with the work. At a minimum, these personnel shall include foreman, machine operator, and project engineer/manager.

The helical tieback anchor Contractor shall not sublet the whole or any part of the contract without the express written permission of the Owner.

©Copyright 2006 Hubbell, Inc.

1.4 Related Project Specifications

To be determined by the specification writer.

1.5 Definitions

A partial list follows. *The Owner may wish to add other specific, project-related items.*

Bearing Stratum: Soil layer(s) of sufficient strength capable of resisting the applied axial load transferred by the helical tieback.

Contractor: The person/firm responsible for performing the helical tieback anchor work.

Coupling: Central steel shaft connection means formed as integral part of the plain extension shaft material. For Type SS anchors, couplings are external cast sleeves, or hot upset forged sockets.

Coupling Bolt(s): High strength, structural steel fasteners used to connect helical anchor segments together. For Type SS segments, the coupling bolt transfers axial load only.

Design Load (DL): Maximum anticipated service load applied to the helical anchor. A.k.a. Working Load (WL).

Free Length: Length of plain extension acting as a tendon, which is free to elongate elastically. A.k.a. un-bonded length or stressing length. Helix plates shall not be located in free length section of tieback. Minimum free length shall be specified on a project specific basis.

Helical Extension: Helical tieback anchor component installed immediately following the lead or starter section, if required. This component consists of one or more helix plates welded to a central steel shaft of finite length. Function is to increase bearing area.

Helical Tieback Anchor: Bearing type anchor used to transfer tensile loads to soil. Helical tieback anchors consist of a central steel shaft, helix bearing plates, coatings, corrosion protection, and a wall connection.

Helix Plate: Generally round steel plate formed into a ramped spiral. The helical shape provides the means to install the helical tieback anchor, plus the plate transfers load to soil in end-bearing. Helix plates are available in various diameters and thicknesses.

Lead Section: The first helical tieback anchor component installed into the soil, consisting of single or multiple helix plates welded to a central steel shaft. A.k.a Starter Section.

Performance Test: Similar to a Proof Test except a cyclic loading method is used to analyze total, elastic, and net movement of the helical anchor. Often used for pre-contract or pre-production load tests, in addition to a specified percentage of production anchors.

©Copyright 2006 Hubbell, Inc.

Plain Extension: Central steel shaft of finite length without helix plates. It is installed following the installation of the lead or starter section or helical extension (if used). The units are connected with couplings and bolts. Plain extensions are used to extend the helix plates beyond the specified minimum free length and into competent load bearing stratum.

Proof Test: Incremental loading of a helical anchor, holding for a period of time, and recording the total movement at each load increment.

Safety Factor: The ratio of the ultimate capacity to the working or design load used for the design of any structural element.

Square Shaft (SS): Solid steel, round-cornered-**S**quare central **S**haft elements ranging in size from 1-1/4" to 2-1/4". A.k.a. Type SQ.

Thread Bar Adapter: Section of central steel shaft used to connect the helical anchor to the wall face via a high tensile strength pre-stressing thread bar.

Torque Strength Rating: The maximum torque energy that can be applied to the helical tieback anchor during installation in soil, a.k.a. allowable, or safe torque.

1.6 Allowable Tolerances

The tolerances quoted in this section are suggested maximums. The actual values established for a particular project will depend on the structural application.

1.6.1 Centerline of helical tieback anchor shall not be more than 6 inches from indicated plan location.

1.6.2 The angular tolerance between installed tieback anchor angle and design angle shall be ±3° as shown on the drawings.

1.7 Quality Assurance

1.7.1 Contractors authorized by CHANCE Civil Construction shall install helical tieback anchors. These Contractors shall have satisfied the requirements relative to the technical aspects of the product and installation procedures as therein specified.

1.7.2 The Contractor shall employ an adequate number of skilled workers who are experienced in the necessary crafts and who are familiar with the specified requirements and methods needed for proper performance of the work of this specification.

1.7.3 All helical tieback anchors shall be installed in the presence of a designated representative of the Owner unless said representative informs the Contractor otherwise. The designated representative shall have the right of access to any and all field installation records and test reports.

©Copyright 2006 Hubbell, Inc.

1.7.4 Screw anchor components as specified therein shall be manufactured by a facility whose quality systems comply with ISO (International Organization of Standards) 9001 requirements. Certificates of Registration denoting ISO Standards Number shall be presented upon request to the Owner or their representative.

1.7.5 CHANCE Civil Construction provides a standard one-year warranty on materials and workmanship of the product. Any additional warranty provided by the Contractor shall be issued as an addendum to this specification.

1.7.6 Design of helical tieback anchors shall be performed by an entity as required in accordance with existing local code requirements or established local practices. This design work may be performed by a licensed professional engineer, an authorized CHANCE Civil Construction Contractor, or designer depending upon local requirements or practices.

1.8 Design Criteria

1.8.1 Helical tieback anchors shall be designed to meet the specified loads and acceptance criteria as shown on the drawings. The calculations and drawings required from the Contractor or Engineer shall be submitted to the Owner for review and acceptance in accordance to Section 3.1 "Construction Submittals".

1.8.1.1 The allowable working load on the helical tieback anchor shall not exceed the following values:

$$P_{allowt} = S_{ut} / FS$$

Where: P_{allowt} = allowable working load in tension (kip)
S_{ut} = Min. ultimate tensile strength of central steel shaft segment (at coupling joint) (kip)
FS = factor of safety suitable for application, i.e. temporary or permanent structures

For permanent applications, it is recommended to use a factor of safety of two (2). For temporary applications, factor of safety typically ranges between 1.25 and 1.5.

It is recommended to use the minimum ultimate tensile strengths as published by CHANCE Civil Construction (shown in Table-A of the Appendix). The ultimate tensile strength may be reduced by the ultimate capacity per helix plate(s) – depending on the number of helix plates specified and type of shaft product used. The ultimate tensile strength may also be reduced by the torque limited ultimate capacity – depending on the type of shaft product used.

1.8.1.2 The ultimate structural capacity shall be determined as:

$$P_{ultt} = S_{ut}$$

Where: P_{ultt} = Ultimate structural capacity in tension (kip)

©Copyright 2006 Hubbell, Inc.

S_{ut} = Minimum ultimate tensile strength of central steel shaft (kip)

It is recommended to use the minimum ultimate tensile strengths as published by CHANCE Civil Construction (shown in Table-A of the Appendix). The ultimate tensile strength may be reduced by the ultimate capacity per helix plate(s) – depending on the number of helix plates specified and type of shaft family used. The ultimate tensile strength may also be reduced by the torque limited ultimate capacity – depending on the type of shaft family used.

The minimum yield strength of the central steel shaft is as follows: Type SS5: 70 ksi; Type SS125, SS1375, SS150, SS175, SS200, SS225: 90 ksi.

1.8.2 Individual helical tieback anchors shall be designed so that the maximum test load will not exceed 90 percent of the minimum ultimate tension capacity of the central steel shaft material. The Contractor shall select the type of thread bar to be used. The thread bar shall be sized so the design load does not exceed 60 percent of the guaranteed ultimate tensile strength of the thread bar. In addition, the thread bar shall be sized so the maximum test load does not exceed 80 percent of the guaranteed ultimate tensile strength of the thread bar.

1.8.3 Helical tieback anchor capacity in soil shall not be relied upon from the following soil layers as defined in the geotechnical reports:

_____

_____

The overall length and installed torque of a helical tieback anchor shall be specified such that the required in-soil capacity is developed by end-bearing on the helix plate(s) in an appropriate strata(s).

It is recommended that the theoretical end-bearing capacity of the helix plates be determined using HeliCAP® Engineering Software or equal commercially available software. The required soil parameters (c, ϕ, γ, or N-values) for use with HeliCAP® or equal shall be provided in the geotechnical reports. The Owner shall determine the allowable response to axial loads.

Helical anchors are not suited for solid, competent rock, but the helix plates can penetrate into dense bearing soils. Appropriate and repeatable installation techniques and helical anchor termination criteria must be identified and verified in the field.

©Copyright 2006 Hubbell, Inc.

1.8.4 Corrosion Protection

This section is optional (see below). Provisions of this section and Section 4.7 below may not be required in the Specification. If this section is not used, then Section 4.7 should likewise be deleted. The degree and extent of corrosion protection must be specified by the Owner (Table-1).

Corrosion protection is a function of structure type, service life, and the overall aggressiveness of the project soils. The need for corrosion protection of helical tieback anchors must be carefully determined and specified as necessary.

Corrosion resistant coatings (i.e. epoxy, plastic sheath) on the lead/starter section are impractical due to abrasive action wearing off the coating as the soil flows over the helix plates and around the central steel shaft. Hot dip galvanization is the only practical means to provide a corrosion resistant coating capable of withstanding the rigors of installation. Extension sections are typically hot-dip galvanized, but other coatings can be specified.

The following requirements are typical. The specifier should review and edit as appropriate for the project.

Structure Type: _____ (e.g. temporary, permanent*) with a temporary structure being defined within a specified time frame (i.e. months rather than years). In general, permanent structures have a service life greater than 24 months.*

Temporary structures do not require corrosion protection.

Service Life: _____(years) *a typical service life of 50 years should be used unless otherwise specified. If the service life of a temporary helical tieback anchor is likely to be extended due to construction delays, it should be considered permanent.*

For a service life of less than 20 years in non-aggressive soil, corrosion protection is not recommended.

Corrosion protection requirements for the various helical tieback anchor elements shall be provided meeting the requirements of Table-B in the Appendix for:

Soil: _____ Aggressive or Non-Aggressive *with optional location and elevation limits defined by the Specifier.*

For guidance on aggressiveness classification, see Table-B in the Appendix. It is recommended to retain the services of a corrosion design professional for very aggressive soils.

©Copyright 2006 Hubbell, Inc.

TABLE-2

CORROSION PROTECTION		
SOIL	**AGGRESSIVE**	**NON-AGGRESSIVE**
CENTRAL STEEL SHAFT (Lead Section)	1. Galvanization OR 2. Minimum 1/8" corrosion loss on outside	1. Bare steel OR 2. Galvanization
CENTRAL STEEL SHAFT (Extension Section)	1. Galvanization OR 2. Epoxy coating OR 3. Minimum 1/8" corrosion loss on outside	1. Bare steel OR 2. Galvanization OR 3. Epoxy coating
ANCHORAGE	1. Trumpet – corrosion inhibitor or grout filled AND 2. Cover, if exposed	1. Bare Steel OR 2. Trumpet – corrosion inhibitor or grout filled

NOTES:
Numbered items are options.
For guidance on aggressiveness classification, see Table-B of the Appendix.
1. Trumpet typically extends 3'-0 to 5'-0 beyond the anchorage.

The most critical area to protect from corrosion is in the vicinity of the anchorage and the portion of the thread bar immediately behind the wall. The vulnerability of this area is demonstrated by the fact that most ground anchor failures occur within a short distance of the anchorage device. Care is required in order to ensure that the thread bar and central steel shaft is protected in this area. Grout-filled trumpets require a short term seal until the grout sets and are typically filled with grout after the helical anchor has been stressed. Grease-filled trumpets require a long-term watertight seal that can be difficult to maintain.

1.9. Ground Conditions

The Geotechnical Report, including logs of soil borings as shown on the boring location plan, shall be considered to be representative of the in-situ subsurface conditions likely to be encountered on the project site. Said Geotechnical Report shall be the used as the basis for helical tieback anchor design using generally accepted engineering judgement and methods.

If soil borings are not available, it is suggested to install a helical anchor at various locations on the project site. Using the well-known installed torque vs. capacity attribute of helical anchors, a presumptive soil profile can be generated.

©Copyright 2006 Hubbell, Inc.

The Geotechnical Report shall be provided for purposes of bidding. If during helical tieback anchor installation, subsurface conditions of a type and location are encountered of a frequency that were not reported, inferred and/or expected at the time of preparation of the bid, the additional costs required to overcome such conditions shall be considered as extras to be paid for.

All available information related to subsurface and general site conditions should be made available to all bidders at the time of bid preparation. It is not reasonable to expect bidders to conduct supplemental site investigations at their own risk and cost prior to bidding, unless the specific contract requirements call for it (Table-1) and provide for appropriate compensation. A mandatory site visit and pre-bid meeting should be held so that the details of the project and the specifications can be thoroughly discussed. These steps will help avoid technical and contractual problems developing during the execution of the work, and will help all parties manage their respective risk.

2 REFERENCED CODES AND STANDARDS

Standards listed by reference, including revisions by issuing authority, form a part of this specification section to the extent indicated. Standards listed are identified by issuing authority, authority abbreviation, designation number, title, or other designation established by issuing authority. Standards subsequently referenced herein are referred to by issuing authority abbreviation and standard designation. In case of conflict, the particular requirements of this specification shall prevail. The latest publication as of the issue of this specification shall govern, unless indicated otherwise.

2.1 American Society for Testing and Materials (ASTM):

2.1.1 ASTM A29/A29M Steel Bars, Carbon and Alloy, Hot-Wrought and Cold Finished.
2.1.2 ASTM A36/A36M Structural Steel.
2.1.3 ASTM A53 Pipe, Steel, Black and Hot-Dipped, Zinc-Coated Welded and Seamless.
2.1.4 ASTM A153 Zinc Coating (Hot Dip) on Iron and Steel Hardware.
2.1.5 ASTM A252 Welded and Seamless Steel Pipe Piles.
2.1.6 ASTM A775 Electrostatic Epoxy Coating
2.1.7 ASTM A193/A193M Alloy-Steel and Stainless Steel Bolting Materials for High Temperature Service.
2.1.8 ASTM A320/A320M Alloy-Steel Bolting Materials for Low Temperature Service.
2.1.9 ASTM A325 Standard Specification for Structural Bolts, Steel, Heat Treated, 120/105 ksi Minimum Tensile Strength.
2.1.10 ASTM A500 Cold-Formed Welded and Seamless Carbon Steel Structural Tubing in Rounds and Shapes.
2.1.11 ASTM A536 Standard Specifications for Ductile Iron Castings
2.1.12 ASTM A572 HSLA Columbium-Vanadium Steels of Structural Quality.
2.1.13 ASTM A615 Standard Specification for Deformed and Plain Steel Bars for Concrete Reinforcement
2.1.14 ASTM A656 Hot-Rolled Structural Steel, High-Strength Low-Alloy Plate with Improved Formability.
2.1.15 ASTM A958 Standard Specification for Steel Castings, Carbon, and Alloy, with Tensile Requirements, Chemical Requirements Similar to Wrought Grades.

©Copyright 2006 Hubbell, Inc.

2.1.16 ASTM A1018 Steel, Sheet and Strip, Heavy Thickness Coils, Hot Rolled, Carbon, Structural, High-Strength Low-Alloy, Columbium or Vanadium, and High-Strength Low-Alloy with Improved Formability.
2.1.17 ASTM D1784 Specification for Rigid Poly Vinyl Chloride (PVC) Compounds and Chlorinated Poly Vinyl Chloride (CPVC) Compounds.
2.1.18 ASTM D1785 Specification for Poly(Vinyl Chloride) (PVC) Plastic Pipe, Schedules 40, 80, and 120.
2.1.19 ASTM D3034 Specification for Type PSM Poly(Vinyl Chloride) (PVC) Sewer Pipe and Fittings.
2.1.20 ASTM D3689 Method of Testing Individual Piles Under Static Axial Tensile Load.

2.2 American Welding Society (AWS):
2.2.1 AWS D1.1 Structural Welding Code – Steel.
2.2.2 AWS D1.2 Structural Welding Code – Reinforcing Steel.

2.3 American Society of Civil Engineers (ASCE):
2.3.1 ASCE 20-96 Standard Guidelines for the Design and Installation of Pile Foundations.

2.4 Association of Drilled Shaft Contractors (ADSC) The International Association of Foundation Drilling**:**
2.4.1 GEC No. 4 - Ground Anchors and Anchored Systems
2.4.2 ADSC Mechanical Anchor Product Data

2.5 Post Tensioning Institute (PTI):
2.5.1 *Recommendations for Prestressed Rock and Soil Anchors*, Third Edition, Copyright 1996 By the Post-Tensioning Institute.

2.6 Society of Automotive Engineers (SAE):
2.6.1 SAE J429 Mechanical and Material Requirements for Externally Threaded Fasteners.

3 SUBMITTALS

3.1 Construction Submittals
3.1.1 The Contractor or Engineer shall prepare and submit to the Owner, for review and approval, working drawings and design calculations for the helical tieback anchor intended for use at least 14 calendar days prior to planned start of construction (but note also Paragraph 3.1.8). All submittals shall be signed and sealed by a Registered Professional Engineer currently licensed in the State/Province of _____.

3.1.2 The Contractor shall submit a detailed description of the construction procedures proposed for use to the Owner for review. This shall include a list of major equipment to be used.

3.1.3 The Working Drawings shall include the following:

3.1.3.a Helical anchor number, location and pattern by assigned identification number
3.1.3.b Helical anchor design load

©Copyright 2006 Hubbell, Inc.

3.1.3.c Type and size of central steel shaft

Type SS125 1-1/4" RCS, Type SS1375 1-3/8" RCS, Type SS5/SS150 – 1-1/2" RCS, Type SS175 – 1-3/4" RCS, Type SS200 – 2" RCS, Type SS225 – 2-1/4" RCS.

3.1.3.d Helix configuration (number and diameter of helix plates)
3.1.3.e Minimum effective installation torque
3.1.3.f Minimum overall length
3.1.3.g Inclination of helical anchor
3.1.3.h Type and size of thread bar

If the number of helix plates per helical tieback anchor required for the project is not shown on the Working Drawings, the Contractor shall have the option of performing subsurface tests using methods subject to the review and acceptance of the Owner. The data collected along with other information pertinent to the project site shall be used to determine the required helix configuration.

3.1.4 The Contractor shall submit shop drawings for all helical tieback anchor components and anchorage details to the Owner for review and approval. This includes helical tieback anchor lead/starter and extension section identification (manufacturer's catalog numbers).

Shop drawings for helical tieback anchor components and standard anchorage connection details can be obtained from CHANCE Civil Construction, their certified Distributors and Installing Contractors, or directly from www.abchance.com or www.atlassys.com.

3.1.5 If required, the Contractor shall submit certified mill test reports for the central steel shaft, as the material is delivered, to the Owner for record purposes. The ultimate strength, yield strength, % elongation, and chemistry composition shall be provided.

3.1.6 The Contractor shall submit plans for pre-production (optional) and production testing for the helical tieback anchors to the Owner for review and acceptance prior to beginning load tests. The purpose of the test is to determine the load versus displacement response of the helical tieback anchor and provide an estimation of ultimate capacity.

It is the responsibility of the structural engineer of record to establish acceptance criteria for helical tieback anchor performance tests, which can be incorporated into the project specific specification. Load testing also provides the means to verify the empirical ratio between the ultimate capacity and the average installing torque of the helical tieback anchor for a specific project site.

3.1.7 The Contractor shall submit to the Owner copies of calibration reports for each torque indicator or torque motor, and all load test equipment to be used on the project. The calibration tests shall have been performed within forty five (45) working days of the date submitted. Helical tieback anchor installation and testing shall not proceed until the Owner has received the calibration reports. These calibration reports shall include, but are not limited to, the following information:

©Copyright 2006 Hubbell, Inc.

3.1.7.a Name of project and Contractor
3.1.7.b Name of testing agency
3.1.7.c Identification (serial number) of device calibrated
3.1.7.d Description of calibrated testing equipment
3.1.7.e Date of calibration
3.1.7.f Calibration data

Load test equipment includes load cylinders, pressure gauges, and load transducers. A. B. Chance Mechanical Dial Torque Indicator (SKU C303-1340) is calibrated prior to final assembly. Its torsion bar design eliminates the need for annual re-calibration.

3.1.8 Work shall not begin until all the submittals have been received and approved by the Owner. The Contractor shall allow the Owner a reasonable time to review, comment, and return the submittal package after a complete set has been received. All costs associated with incomplete or unacceptable submittals shall be the responsibility of the Contractor.

3.2 Installation Records

The Contractor shall provide the Owner copies of helical tieback anchor installation records within 24 hours after each installation is completed. Records shall be prepared in accordance with the specified division of responsibilities as noted in Table-1. Formal copies shall be submitted on a weekly basis. These installation records shall include, but are not limited to, the following information.

3.2.1 Name of project and Contractor
3.2.2 Name of Contractor's supervisor during installation
3.2.3 Date and time of installation
3.2.4 Name and model of installation equipment
3.2.5 Type of torque indicator used
3.2.6 Location of helical anchor by assigned identification number
3.2.7 Elevation of anchorage
3.2.8 Actual helical tieback anchor type and configuration – including lead/starter section (number and size of helix plates), number and type of extension sections (manufacturer's SKU numbers)
3.2.9 Helical tieback anchor installation duration and observations
3.2.10 Total length of installed helical anchor
3.2.11 Inclination of helical anchor
3.2.12 Installation torque at one-foot intervals for the final 10 feet
3.2.13 Comments pertaining to interruptions, obstructions, or other relevant information
3.2.14 Rated load capacities

3.3 Test Reports

The Contractor shall provide the Owner copies of field test reports within 24 hours after completion of the load tests. Records shall be prepared in accordance with the specified division of responsibilities as noted in Table-1. Formal copies shall be submitted within a reasonable amount of time following test completion.

©Copyright 2006 Hubbell, Inc.

These test reports shall include, but are not limited to, the following information (note Section 6 – Helical Anchor Load Tests).

3.3.1 Name of project and Contractor
3.3.2 Name of Contractor's supervisor during installation
3.3.3 Name of third party test agency, if required
3.3.4 Date, time, and duration of test
3.3.5 Location of helical anchor by assigned identification number
3.3.6 Type of test (performance, proof)
3.3.7 Description of calibrated testing equipment and test set-up
3.3.8 Actual helical tieback anchor type and configuration – including lead/starter section, number and type of extension sections (manufacturer's SKU numbers)
3.3.9 Steps and duration of each load increment
3.3.10 Cumulative anchor-head movement at each load step
3.3.11 Comments pertaining to test procedure, equipment adjustments, or other relevant information
3.3.12 Signed by third party test agency rep., registered professional engineer, or as required by local jurisdiction

3.4 Closeout Submittals

3.4.1 Warranty: Warranty documents specified herein
3.4.1.a Project Warranty: Refer to Conditions of the Contract for project warranty provisions

Coordinate the warranty period stated herein with the project warranty as stated in the Contract documents.

Warranty Period: (*Specify Term*) years commencing on date of Substantial Completion

3.4.1.b Manufacturer's Warranty: Submit, for Owner's Acceptance, manufacturer's standard warranty document executed by authorized company official. Manufacturer's warranty is in addition to, and not a limitation of, other rights the Owner may have under Contract Document.

4 PRODUCTS AND MATERIALS

4.1 Central Steel Shaft:

The central steel shaft, consisting of lead sections, helical extensions, and plain extensions, shall be Type SS as manufactured by CHANCE Civil Construction (Centralia and Independence, MO).

4.1.1 *SS5 1-1/2" Material*: Shall be hot rolled Round-Cornered-Square (RCS) solid steel bars meeting dimensional and workmanship requirements of ASTM A29. The bar shall be modified medium carbon steel grade (similar to AISI 1044) with improved strength due to fine grain size.

4.1.1.a Torsional strength rating = 5,700 ft-lb

©Copyright 2006 Hubbell, Inc.

4.1.1.b Minimum yield strength = 70 ksi

4.1.2 *SS125 1-1/4"; SS150 1-1/2"; SS175 1-3/4"; SS200 2"; SS225 2-1/4" Material*: Shall be hot rolled Round-Cornered-Square (RCS) solid steel bars meeting the dimensional and workmanship requirements of ASTM A29. The bar shall be High Strength Low Alloy (HSLA), low to medium carbon steel grade with improved strength due to fine grain size.

4.1.2.a Torsional strength rating: SS125 = 4,000 ft-lb; SS150 = 7,000 ft-lb; SS175 = 10,500 ft-lb; SS200 = 16,000 ft-lb; SS225 = 21,000 ft-lb

4.1.2.b Minimum yield strength = 90 ksi

4.2 Helix Bearing Plate:

Shall be hot rolled carbon steel sheet, strip, or plate formed on matching metal dies to true helical shape and uniform pitch. Bearing plate material shall conform to the following ASTM specifications.

4.2.1 *SS5 Material*: Per ASTM A572, or A1018, or A656 with minimum yield strength of 50 ksi. Plate thickness is 3/8".

4.2.2 *SS125 Material*: Per ASTM A572 with minimum yield strength of 50 ksi. Plate thickness is 3/8" or ½".

4.2.3 *SS150 and SS175 Material*: Per ASTM A656 or A1018 with minimum yield strength of 80 ksi. Plate thickness is 3/8".

4.2.4 *SS200 and SS225 Material*: Per ASTM A656 or A1018 with minimum yield strength of 80 ksi. Plate thickness is ½".

4.3 Bolts:

The size and type of bolts used to connect the central steel shaft sections together shall conform to the following ASTM specifications.

4.3.1 *SS125 1-1/4" Material*: 5/8" diameter bolt (2 per coupling) per SAE J429 Grade 8.

4.3.2 *SS5 and SS150 1-1/2" Material*: ¾" diameter bolt per ASTM A325 or A320 Grade L7.

4.3.3 *SS175 1-3/4" Material*: 7/8" diameter bolt per ASTM A193 Grade B7.

4.3.4 *SS200 2" Material*: 1-1/8" diameter bolt per ASTM A193 Grade B7.

4.3.5 *SS225 2-1/4" Material*: 1-1/4" diameter bolt per ASTM A193 Grade B7.

4.4 Couplings:

For type SS125, SS5, SS150, SS175, SS200, and SS225 material, the coupling shall be formed as an integral part of the plain and helical extension material as hot upset forged sockets.

4.5 Thread bar:

©Copyright 2006 Hubbell, Inc.

Helical tieback anchor thread bar shall be either a threaded stud adapter, or a combination of pre-stressing steel tendon and ductile iron or forged steel adapter, both of which are attached to the previously installed central steel shaft via an integrally forged socket or cast steel socket and coupling bolt. Tendon shall be a continuous thread steel bar of specified diameter and length depending on the application and load, per ASTM A615 (Dywidag bar or Williams All-Thread Rebar).

4.6 Anchorage:

Stressing anchorages shall be a steel bearing plate with a threaded anchor nut. Anchorage devices shall be capable of developing 95 percent of the guaranteed ultimate tensile strength of the thread bar.

4.6.1 Anchor nuts, bevel washers, and other threadable hardware shall be designed to comply with the load carrying requirements of the anchorage.
4.6.2 The bearing plate shall be fabricated from steel conforming to ASTM A36, A588, A709 or A572 specifications, or suitable equivalent.
4.6.3 The trumpet shall be fabricated from a steel pipe or tube conforming to the requirements of ASTM A-53 and A252 for pipe and ASTM A500 for tubing, or from a PVC pipe conforming to the requirements of ASTM D1785.
4.6.4 Anchorage covers shall be fabricated from steel or plastic with a minimum thickness of 0.10”. If grease filled, the joint between the cover and the bearing plate shall be watertight.

4.7 Corrosion Protection (Optional)

The corrosion protection requirements, if any, are identified in Section 1.8.4. The Specifier may elect to delete this section entirely if no corrosion protection materials are required such as for helical anchors in non-aggressive ground.

4.7.1 Epoxy Coating: If used, the thickness of coating applied electrostatically to the central steel shaft shall be 7-12 mils. Epoxy coating shall be in accordance with ASTM A775. Bend test requirements are not required. Coupling bolts and nuts are not required to be epoxy coated.

4.7.2 Galvanization: If used, all Hubbell Power Systems, Inc./A. B. Chance Type SS material shall be hot-dipped galvanized in accordance with ASTM A153 or A123 after fabrication.

5 EXECUTION

5.1 Site Conditions

5.1.1 Prior to commencing helical anchor installation, the Contractor shall inspect the work of all other trades and verify that all said work is completed to the point where helical tieback anchors may commence without restriction.

5.1.2 The Contractor shall verify that all helical tieback anchors may be installed in accordance with all pertinent codes and regulations regarding such items as underground obstructions, right-of-way limitations, utilities, etc.

©Copyright 2006 Hubbell, Inc.

5.1.3 In the event of a discrepancy, the Contractor shall notify the Owner. The Contractor shall not proceed with helical tieback anchor installation in areas of discrepancies until said discrepancies have been resolved. All costs associated with unresolved discrepancies shall be the responsibility of the Owner.

5.2 Installation Equipment

5.2.1 Shall be rotary type, hydraulic power driven torque motor with clockwise and counter-clockwise rotation capabilities. The torque motor shall be capable of continuous adjustment to revolutions per minute (RPM's) during installation. Percussion drilling equipment shall not be permitted. The torque motor shall have torque capacity 15% greater than the torsional strength rating of the central steel shaft to be installed.

Helical tieback anchors should be installed with high torque, low RPM torque motors, which allow the helical screw plates to advance with minimal soil disturbance.

5.2.2 Equipment shall be capable of applying adequate down pressure (crowd) and torque simultaneously to suit project soil conditions and load requirements. The equipment shall be capable of continuous position adjustment to maintain proper helical anchor alignment.

5.3 Installation Tooling

5.3.1 Shall consist of a Kelly Bar Adapter (KBA) and Type SS drive tool as manufactured by CHANCE Civil Construction and used in accordance with the manufacturers written installation instructions.

Installation tooling should be maintained in good working order and safe to operate at all times. Flange bolts and nuts should be regularly inspected for proper tightening torque. Bolts, connecting pins, and retainers should be periodically inspected for wear and/or damage and replaced with identical items provided by the manufacturer. Heed all warning labels. Worn or damaged tooling should be replaced.

5.3.2 A torque indicator shall be used during helical tieback anchor installation. The torque indicator can be an integral part of the installation equipment or externally mounted in-line with the installation tooling. Torque indicators are available from CHANCE Civil Construction.

5.3.2.a Shall be capable of providing continuous measurement of applied torque throughout the installation.

5.3.2.b Shall be capable of torque measurements in increments of at least 500 ft-lb

5.3.2.c Shall be calibrated prior to pre-production testing or start of work. Torque indicators which are an integral part of the installation equipment shall be calibrated on-site. Torque indicators which are mounted in-line with the installation tooling shall be calibrated either on-site or at an appropriately equipped test facility. Indicators that measure torque as a function of hydraulic pressure shall be calibrated at normal operating temperatures.

©Copyright 2006 Hubbell, Inc.

5.3.2.d Shall be re-calibrated, if in the opinion of the Owner and/or Contractor reasonable doubt exists as to the accuracy of the torque measurements.

5.4 Installation Procedures

5.4.1 *Central Steel Shaft:*

5.4.1.a The helical tieback anchor installation technique shall be such that it is consistent with the geotechnical, logistical, environmental, and load carrying conditions of the project.

5.4.1.b The lead section shall be positioned at the location as shown on the working drawings. The lead section may be started perpendicular to the wall face to assist initial advancement into the soil. After initial penetration, the required inclination angle shall be established. The helical tieback anchor sections shall be engaged and advanced into the soil in a smooth, continuous manner at a rate of rotation of 5 to 20 RPM's. Extension sections shall be provided to obtain the required minimum overall length and installation torque as shown on the working drawings. Connect sections together using coupling bolt and nut torqued to 40 ft-lb.

5.4.1.c Sufficient down pressure shall be applied to uniformly advance the helical tieback anchor sections approximately 3 inches per revolution. The rate of rotation and magnitude of down pressure shall be adjusted for different soil conditions and depths.

5.4.2 *Thread Bar:*

5.4.2.a After the termination criteria as detailed in Section 5.5 has been met, the central steel shaft is connected to the anchorage via the threaded stud adapter or via the combination of pre-stressing steel tendon and adapter.

5.5 Termination Criteria

5.5.1 The torque as measured during the installation shall not exceed the torsional strength rating of the central steel shaft.

5.5.2 The minimum installation torque and minimum free-length criteria as shown on the working drawings shall be satisfied prior to terminating the helical tieback anchor installation. In the event any helical anchor fails these production quality control criteria, the following pre-qualified remedies are authorized:

5.5.3 If the torsional strength rating of the central steel shaft and/or installation equipment has been reached prior to achieving the minimum free-length required, the Contractor shall have the following options:

5.5.3.a Terminate the installation at the depth obtained subject to the review and acceptance of the Owner, or:

5.5.3.b Remove the existing helical tieback anchor and install a new one with fewer and/or smaller diameter helix plates. The new helix configuration shall be subject to review and acceptance of the Owner. If re-installing in the same location, the top-most helix of the new helical

©Copyright 2006 Hubbell, Inc.

tieback anchor shall be terminated at least (3) three feet beyond the terminating depth of the original anchor without exceeding any applicable maximum embedment length requirements, or:

5.5.3.c Replace the existing helical tieback anchor with one having a shaft with a higher torque strength rating. The new shaft size/type shall be subject to review and acceptance of the Owner. If re-installing in the same location, the top-most helix of the new helical tieback anchor shall be terminated at least (3) three feet beyond the terminating depth of the original anchor without exceeding any applicable maximum embedment length requirements.

It is generally not recommended to re-use helical tieback anchor shaft material after it has been permanently twisted during a previous installation.

5.5.4 If the minimum installation torque as shown on the working drawings is not achieved at the minimum overall length, the Contractor shall have the following options:

5.5.4.a Install the helical tieback anchor deeper using additional extension sections until the minimum installation torque criterion is met, provided that, if a maximum length constraint is applicable, continued installation does not exceed said maximum length constraint, or:

5.5.4.b Remove the existing helical tieback anchor and install a new one with additional and/or larger diameter helix plates. The new helix configuration shall be subject to review and acceptance of the Owner. If re-installing in the same location, the top-most helix of the new helical tieback anchor shall be terminated at least (3) three feet beyond the terminating depth of the original anchor provided that, if a maximum length constraint is applicable, continued installation does not exceed said maximum length constraint, or:

5.5.4.c De-rate the load capacity of the helical tieback anchor and install additional helical anchors as necessary. The de-rated capacity and additional anchor location shall be subject to the review and acceptance of the Owner.

5.5.5 If the minimum installation torque as shown on the working drawings is not achieved before reaching a specified maximum embedment length, the Contractor shall have the following options:

5.5.5.a If allowed by the Owner's representative, remove the existing helical tieback anchor and reinstall at a position at least three times the diameter of the largest helix away from the initial location. Original embedment length and installation torque criteria must be met. Repositioning may require the installation of additional helical tieback anchors with design loads adjusted for spacing changes, or:

5.5.5.b Demonstrate acceptable helical tieback anchor performance through proof testing, or:

5.5.5.c De-rate the load capacity of the helical tieback anchor and install additional helical anchors as necessary. The de-rated capacity and additional anchor location shall be subject to the review and acceptance of the Owner.

5.5.6 If the helical tieback anchor is refused or deflected by a subsurface obstruction, the installation shall be terminated and the anchor removed. The obstruction shall be removed, if feasible, and the helical

©Copyright 2006 Hubbell, Inc.

tieback anchor re-installed. If obstruction can't be removed, the helical tieback anchor shall be installed at an adjacent location, subject to review and acceptance of the Owner.

5.5.7 If the torsional strength rating of the central steel shaft and/or installation equipment has been reached prior to proper positioning of the last plain extension section relative to the anchorage, the Contractor may remove the last plain extension and replace it with a shorter length extension. If it is not feasible to remove the last plain extension, the Contractor may cut said extension to the correct length and field drill a hole in cut-off shaft. The Contractor shall not reverse (back-out) the helical anchor to facilitate extension removal.

5.5.8 The average torque for the last three feet of penetration shall be used as the basis of comparison with the minimum installation torque as shown on the working drawings. The average torque shall be defined as the average of the last three readings recorded at one-foot intervals.

The average torque can be empirically related to the helical tieback anchor's ultimate capacity in end-bearing. This well-known attribute of helical anchors can be used as a production control method to indicate the tieback's end-bearing capacity.

6 HELICAL TIEBACK ANCHOR LOAD TESTS

The Contractor shall submit for review and acceptance the proposed helical tieback anchor load testing procedure. Production and pre-production test procedures shall be in conformance with the helical anchor test procedures as detailed below, and shall provide the minimum following information:

- Type and accuracy of load equipment
- Type and accuracy of load measuring equipment
- Type and accuracy of anchor-head deflection equipment
- Calibration report for complete load equipment, including hydraulic jack, pump, pressure gauge, hoses, and fittings.

6.1 Pre-Production Tests (Optional)

Load tests shall be performed to verify the suitability and capacity of the proposed helical tieback anchor, and the proposed installation procedures prior to installation of production anchors. _____ sacrificial test anchors shall be constructed immediately prior to the start of work on the production tieback anchors. The Owner shall determine the number of pre-production tests, their location, and acceptable load and movement criteria. Additional purpose of pre-production tests is to empirically verify the ultimate capacity to the average installing torque of the helical tieback anchor for the project site.

Pre-production helical anchor installation methods, procedures, equipment, and overall length shall be identical to the production anchors to the extent practical except where approved otherwise by the Owner. Such tests shall be based, as a minimum, on the principles of the performance test.

©Copyright 2006 Hubbell, Inc.

If the pre-production test fails to meet the design requirements, the Contractor shall modify the helical tieback anchor design and/or installation methods and retest the modified anchor, as directed by the Owner. *For prescriptive specifications, the Engineer will define the appropriate modifications.*

6.2 Load Test Equipment

6.2.1 The hydraulic jack shall be positioned at the beginning of the test such that the unloading and repositioning of the jack during the test shall not be required. The jacking system shall be capable of applying a tension load not less than eighty percent (80%) of the guaranteed ultimate tension capacity of the thread bar. The pressure gauge shall be graduated in 100 psi increments or less. The stroke of the jack shall not be less than the theoretical elastic elongation of the total helical anchor length at the maximum test load.

6.2.2 The load test equipment shall be capable of increasing or decreasing the applied load incrementally. The incremental control shall allow for small adjustments, which may be necessary to maintain the applied load for a sustained, hold period.

6.2.3 The reaction system (or retaining structure itself) shall be designed so as to minimize its movement under load and to prevent bending of the thread bar. If the reaction system is the retaining structure, then said structure and connections shall be checked to determine if they have sufficient strength and capacity to distribute the test loads to the ground. Test loads are normally higher than the design loads on the structure. The direction of the applied load shall be collinear with the helical anchor at all times.

6.2.4 A dial gauge shall be used to measure anchor movement. The dial gauge shall have an accuracy of at least +/-0.001-in. and a minimum travel sufficient to measure all anchor movements without requiring resetting the gauge. The dial gauge shall be positioned so its stem is coaxial with the axis of the anchor. The stem may rest on a smooth plate located at the end of the anchor. Said plate shall be positioned perpendicular to the axis of the anchor. The dial gauge shall be supported by a reference apparatus to provide an independent fixed reference point. Said reference apparatus shall be independent of the reaction system and shall not be affected by any movement of the reaction system.

6.2.5 The load test equipment shall be re-calibrated, if in the opinion of the Owner and/or Contractor reasonable doubt exists as to the accuracy of the load or deflection measurements.

6.3 Testing Program

6.3.1 The anchor testing program shall consist of two parts, namely, performance tests and proof tests. The testing procedures are as described in Sections 6.3.4 and 6.3.5 respectively.

6.3.2 The Owner shall select the helical tieback anchors to be performance tested within each wall area or tier. One anchor per wall area or tier shall be tested in accordance with the performance test procedures. These anchors should be located in the area of soil borings if possible. These anchors

©Copyright 2006 Hubbell, Inc.

are to be installed, tested, and approved by the Owner prior to the installation of production anchors within that area or tier. All anchors, which are performance tested, shall be used as production anchors and incorporated into the retention structure. Upon completion and approval of the performance tests, the installation of production anchors may proceed.

6.3.3 Proof tests shall be performed on all production helical tieback anchors which are not performance tested. Proof tests results are subject to the approval of the Owner.

6.3.4 **Performance Test Procedures**

6.3.4.a Two (2) percent of the helical tieback anchors or a minimum of two (2) anchors, which ever is greater, shall be performance tested in accordance with the following procedures.

6.3.4.b The helical anchors which are performance tested may be completely unloaded prior to adjusting to the lock-off load, if so warranted by the construction sequence. Final loading to the lock-off load does not require further movement readings.

6.3.4.c Helical tieback anchors shall be performance tested by incrementally loading and unloading the anchor in accordance with the following schedule. The load shall be raised from one increment to another immediately after recording the anchor movement. The anchor movement shall be measured and recorded to the nearest 0.001 inches with respect to an independent fixed reference point at the alignment load and at each increment load. The load shall be monitored with a pressure gauge. At load increments other than the maximum test load, the load shall be held just long enough to obtain and record the movement reading.

PERFORMANCE TEST SCHEDULE CYCLICAL LOAD INCREMENTS (%DL/100)				
AL 0.25DL*	AL 0.25DL 0.50DL*	AL 0.25DL 0.50DL 0.75DL*	AL 0.25DL 0.50DL 0.75DL 1.00DL*	AL 0.25DL 0.50DL 0.75DL 1.00DL 1.25DL* Reduce to lock-off load#

* - See Section 6.3.4.e
\# - Except as noted in Section 6.3.4.b
AL = Alignment Load (10%-15% DL); DL = Design (Working) Load

A test load higher than 1.25 DL may be specified by the Owner under special conditions. Such special conditions may arise if fixed reference points cannot be practically established, against which to directly measure anchor head movement, for example.

6.3.4.d The 1.25DL load increment shall be held for ten (10) minutes. The ten minute observation period shall commence as soon as the 1.25DL load is applied to the anchor. Movements shall be recorded at 0.5, 1, 2, 3, 4, 5, 6, and 10 minutes. If the anchor movement between the one (1) minute and ten (10) minute readings exceeds 0.05 inches, then the 1.25 DL test load shall

©Copyright 2006 Hubbell, Inc.

be maintained for an additional 20 minutes. Movements shall be recorded at 15, 20, 25, and 30 minutes. If the acceptance criteria given in Section 6.4.1 is not satisfied, then the anchor test shall be continued for an additional 30 minutes. Movements shall be recorded at 45 and 60 minutes. If the acceptance criteria is not satisfied after this extended observation period, then the contractor shall exercise one of the options as referenced in Section 6.4.2.

6.3.4.e The Contractor shall plot the helical anchor movement versus load for each load increment marked with an asterisk (*) in the performance test schedule and plot the residual movement at each alignment load versus the highest previously applied load.

6.3.4.f Throughout the 1.25DL observation period, the load shall be held constant by adjusting the hydraulic pressure. Care must be taken so as not to exceed the 1.25DL test load.

6.3.5 **Proof Test Procedures**

6.3.5.a All anchors which are not performance tested shall be proof tested.

6.3.5.b Anchors which are proof tested may be completely unloaded prior to adjusting to the lock-off load, if so warranted by the construction sequence. Final loading to the lock-off load does not require further movement readings.

6.3.5.c The proof test shall be performed by incrementally loading the helical anchor in accordance with the following schedule. The load shall be raised from one increment to another after an observation period. The anchor movement shall be measured and recorded to the nearest 0.001 inches with respect to an independent fixed reference point at the alignment load and at each increment load. The load shall be monitored with a pressure gauge. At load increments other than the maximum test load, the load shall be held for a period not to exceed two (2) minutes. The two minute observation period shall begin when the pump begins to load the anchor to the next load increment. Movement readings shall be taken at the end of the two minute observation period.

PROOF TEST SCHEDULE	
LOAD TEST SCHEDULE (%DL/100)	OBSERVATION PERIOD (MIN.)
AL	0.0
0.25DL	2.0
0.50DL	2.0
0.75DL	2.0
1.00DL	2.0
1.25DL*	5.0
Reduce to lock-off load#	

* - see Section 6.3.5.e
# - except as noted in Section 6.3.5.b
AL = Alignment Load (10%-15% DL)
DL = Design (Working) Load

6.3.5.d The 1.25DL test load shall be maintained for five (5) minutes. This five minute observation period shall commence as soon as the 1.25DL is applied to the anchor. Movement readings shall be recorded at 0.5, 1, 2, 3, 4, and 5 minutes. If the movement between the 0.5 and 5

©Copyright 2006 Hubbell, Inc.

minute reading exceeds 0.05 inches, then the 1.25DL test load shall be maintained for an additional five (5) minutes. Movement readings shall be recorded at 6 and 10 minutes. If the acceptance criteria given in Section 6.4.1 is not satisfied, then the anchor test shall be continued for an additional twenty (20) minutes. Movement readings shall be recorded at 15, 20, 25, and 30 minutes. If the acceptance criteria is not satisfied after this extended observation period, then the contractor shall exercise one of the options as referenced in Section 6.4.2.

6.3.5.e The Contractor shall plot the helical anchor movement vs. load for each load increment in the proof test.

6.3.5.f Throughout the 1.25DL observation period, the load shall be held constant by adjusting the hydraulic pressure. Care must be taken so as not to exceed the 1.25DL test load.

6.4 Acceptance Criteria

6.4.1 The net movement for the performance and proof tests shall not exceed 0.10 inches during the final log cycle of time (examples, 3-min. to 30-min. for performance tests; 1-min. to 10-min. for proof tests).

6.4.2 If the above criteria is exceeded, then the test shall be continued for an extended period of time as defined in Section 6.3.4.d for the performance test and in Section 6.3.5.d for the proof test. If the final log cycle of time movement at the end of the extended observation period exceeds 0.10 then the contractor shall have the following options:

6.4.2.a Extend the observation period for an additional 60 minutes for the performance test with movement readings taken at 80, 90, 100, and 120 minutes. Extend the observation period for an additional 30 minutes if the proof test is involved with movement readings taken at 45 and 60 minutes. The net movement shall not exceed 0.10 inches during the final log cycle of time.

6.4.2.b Install the helical anchor deeper so as to increase its average installation torque, provided that the maximum torque capacity of the anchor and the maximum length constraint, is not exceeded. This anchor shall be proof tested.

6.4.2.c Remove the helical anchor and reinstall an anchor with larger diameter and/or additional helices. If this anchor is reinstalled at the same location, then the last helix of this reinstalled anchor shall penetrate at least five (5'-0) feet beyond the length of the original anchor, provided the maximum length constraint is not exceeded. This anchor shall be proof tested.

6.4.2.d Reduce the design load of the helical anchor. This anchor shall be performance tested at the reduced design load. This option will require one or two additional anchors be installed adjacent to this reduced design load anchor. The number of additional anchors to be installed is a function of the reduced design load. Adjacent anchor(s) shall be installed at least three diameters, based on the largest helix, away from the reduced design load anchor. Design loads on adjacent anchor(s) shall be adjusted accordingly based on the revised horizontal spacing.

©Copyright 2006 Hubbell, Inc.

7 MEASUREMENT AND PAYMENT

Helical tieback anchor work can be paid for in different ways, reflecting the relative risk to be accepted by the Owner and the Contractor. However, the following items are common and standard.

QUANTITY	DESCRIPTION	UNIT
1	Mobilization/Demobilization	Lump sum
As required	Conduct pre-production test anchor program of declared scope	Lump sum
As required	Performance Test Production Helical Anchors	Per anchor
-	Obstructions	Per hour or Force Account
As required	Helical Anchor Installation	As below

- *Per Unit Length*: Helical tieback anchors meeting the design capacity shall be paid for per lineal foot below grade.
- *Per Helical Anchor*: Helical tieback anchors meeting the design capacity shall be paid for on a "per anchor" basis (no allowance for changes in length relative to that originally bid).
- *Per Helical Anchor with Add/Deduct*: Helical tieback anchors meeting the design capacity shall be paid for on a "per anchor" basis, with a predetermined length, and an add/deduct amount per lineal foot to accommodate field changes.
- *Lump Sum*: The whole helical tieback anchor project shall be paid for on a "lump sum" basis (no allowance for changes due to additional anchor length relative to that originally bid).

END OF SPECIFICATION

©Copyright 2006 Hubbell, Inc.

APPENDIX

TABLE-A

CHANCE Civil Construction

MECHANICAL STRENGTH RATINGS – Type SS HELICAL ANCHORS

RATING TYPE	CENTRAL STEEL SHAFT PRODUCT FAMILY					
	SS125 1-1/4" RCS	SS5 1-1/2" RCS	SS150 1-1/2" RCS	SS175 1-3/4" RCS	SS200 2" RCS	SS225 2-1/4" RCS
Torque Strength Rating (ft-lb)	4,000	5,700	7,000	10,500	16,000	23,000
Ultimate Strength Per Helix (kip) (Tension/Compression)	*30	*40	*40	*50	60	60
Tension Capacity Limit[1] (kip)	40	55	70	#105	#160	#230
Ultimate Tension Strength[2] (kip)	60	70	70	100	150	200

*** For 14" Dia. 3/8" Thick Helix Plates, Reduce the Ultimate Capacity by 20%**

1 - Based on torque rating – Tension Capacity Limit = Torque Rating x Kt; "Default" Kt for Type SS = 10

2 – Based on mechanical strength of coupling

 # - Limited by mechanical strength of coupling bolt

Actual installed capacities are dependent on site specific soil conditions.

©Copyright 2006 Hubbell, Inc.

APPENDIX

TABLE-B

GUIDANCE OF GROUND AGGRESSIVENESS CLASSIFICATION

Soil tests may be performed to measure the aggressiveness of the soil environment, especially if field observations indicate corrosion of existing structures. The most common and simplest tests are for electrical resistivity, pH, chloride, and sulfates. The designation for these tests and the critical values defining whether an aggressive soil environment exists, are as shown below. Per FHWA-RD-89-198, the ground is considered aggressive if any one of these indicators shows critical values.

Property	Test Designation	Critical Values
Resistivity	ASTM G 57 AASHTO T-288	below 2,000 ohm-cm
pH	ASTM G 51 AASHTO T-289	below 5
Sulfate	ASTM D 516M ASTM D 4327	above 200 ppm
Chloride	ASTM D 512 ASTM D 4327 AASHTO T-291	above 100 ppm
Organic Content	AASHTO T-267	1% max

©Copyright 2006 Hubbell, Inc.

CHANCE®
Helical Pier Foundation System

Installation Specifications
for
Remedial Applications

NOTICE

The following suggested specifications are written as a guide to assist the specifier in writing his own specifications. Specific circumstances involving the structure, the soils and other factors must be considered on each project to assure an adequate installation specification. Please consult state and local building codes and authorities to ascertain and verify compliance to their rules, regulations and requirements.

Chance shall not be responsible or liable for the adoption, revision, implementation, use or mis-use of these suggested specifications. Chance's sole responsibility shall be with respect to CHANCE® products, and any such responsibility shall be subject to and limited by the Terms & Conditions set forth in Chance's SCS Policy Sheet as amended.

NOTE: Because Hubbell has a policy of continuous product improvement, we reserve the right to change design and specifications without notice.

©Copyright 2005 Hubbell, Inc. Printed in USA

A.B. Chance,
a Division of Hubbell Power Systems, Inc.
210 North Allen Street
Centralia, MO 65240 USA

Phone: 573-682-8414
Fax: 573-682-8660
www.abchance.com

Bulletin 1-9013
Rev. 6/05

I. General

A. The CHANCE® Helical Pier Foundation System shall be installed by authorized Chance Dealers. These Dealers shall have satisfied the certification requirements relating to the technical aspects of the product and the ascribed installation techniques.

B. All work as described herein shall be performed in accordance with all applicable safety codes in effect at the time of installation.

C. The Dealer shall employ a skilled, experienced work force who are familiar with the requirements and methods necessary for proper performance of the work as outlined in these specifications.

II. Helical Pier Location

It is the responsibility of the dealer to determine the location of, and avoid contacting, underground utilities (gas, electricity, water, telephone, TV, etc.).

A. Helical piers should be installed as shown on the Engineer's Plan of Repair (PR). If an Engineer's PR is not available, then the Dealer shall submit a written plan of repair to the owner or owner's representative.

B. Plan of Repair shall include, but is not limited to the following:

1. Total number of helical piers required
2. Locations of the individual helical piers
3. Size and number of helices per helical pier
4. Minimum installed depth of the helical pier
5. Minimum final installation torque of the helical piers
6. If testing is required, plan per paragraph IX.C.

III. Helical Pier Selection

A. The lead sections with helices and extension sections shall be manufactured by Chance and as shown on attached drawings.

B. All units shall conform to the material specifications as referenced on these drawings.

C. The number and sizes of helices, and the shaft size of helical pier shall be as shown on the Plan of Repair.

D. The Dealer shall have the option of performing a soil test using either the CHANCE® Soil Probe or other method approved by the engineer. The data acquired along with other information available about the site shall be used in determining the proper helical pier.

IV. Installation Equipment

A. Installing Units

1. Installation unit shall consist of rotary type torque motor with forward and reverse capabilities.

2. These units shall be capable of developing the minimum torque as required by the Plan of Repair.

3. These units shall be capable of positioning the helical pier at the proper installation angle. This angle varies between 0 (vertical) to 10 degrees depending upon application and type of foundation termination specified.

4. These units shall be in good working condition and capable of being operated in a safe manner

B. Installation Tooling

1. Adapters approved by the Engineer of Record shall be employed to safely connect the installation units to the helical piers and extensions.

2. These adapters shall have torque capacity ratings at least equal to the minimum ultimate torque rating of the helical piers as specified for the project.

3. These adapters shall be securely connected to the helical pier during installation so as to prevent accidental separation.

C. Torque Monitoring Devices

1. The torque being applied by the installing units shall be monitored throughout the installation process.

2. Torque monitoring devices shall be either a part of the installing unit or an independent device in-line with the installing unit. Calibration data for either unit shall be available for review by the owner or owner's representative.

V. Installation Procedures

It is the responsibility of the dealer to determine the location of, and avoid contacting, underground utilities (gas, electricity, water, telephone, TV, etc.).

A. The helical pier shall be positioned as shown on the Plan of Repair. Proper angular alignment shall be established at the start of installation.

B. The helical pier shall be installed in a smooth, continuous manner. The rate of helical pier rotation shall be in the range of 5 to 20 revolutions per minute.

C. Sufficient down pressure shall be applied to advance the helical pier.

D. Plain extension material may be required to position the helical pier at the depth required by the Plan of Repair. Extensions shall be coupled to the helical pier using the bolts provided with the extension. These bolts shall be installed and tightened to approximately 40 ft-lb (54 Nm) of torque.

E. Installation torque shall be monitored throughout the installation process.

F. If underground obstructions are encountered during installation, the Dealer shall have the option of removing the obstruction if possible or relocating the helical pier. This latter option may require the relocation of adjacent helical piers.

VI. Termination of Installation

A. The maximum installation torque shall at no time exceed the torque rating of the helical pier shaft as specified for the project.

B. Helical piers shall be installed to the minimum torque value as shown on the Plan of Repair. *If the Plan of Repair is an Engineer's Plan of Repair, the approval of the Engineer of Record shall be obtained before option b or c is implemented.*

1. If the minimum torque requirement has not been satisfied at the minimum depth level, the Dealer shall have the following options:

a. Install the helical pier deeper using additional plain extension material until the specified torque level is obtained, or

b. Remove the existing helical pier and install a helical pier with larger and/or more helices. This revised helical pier shall be installed at least three 3 ft (0.9 m) beyond the termination depth of the original helical pier.

c. Add additional helical piers.

C. The minimum depth of installation shall be as shown on the Plan of Repair. If the installer cannot achieve the depth shown on the Engineer's Plan of Repair, the engineer shall be contacted before proceeding further.
If the maximum torque rating of the installing unit has been reached but that of the helical pier has not prior to satisfying the minimum depth requirement, the Dealer shall have the option of utilizing a higher torque installing unit meeting the requirement of paragraph IV to drive the helical pier deeper.

1. If the minimum torque rating of the helical pier and/or installing unit has been reached prior to satisfying the the minimum depth level, the Dealer shall have the following options:
If the Plan of Repair is an Engineer's Plan of Repair, the approval of the Engineer of Record shall be obtained before option a or b is implemented.

a. Terminate the installation at the depth obtained, or

b. Remove the existing helical pier and install a helical pier with smaller and/or fewer helices. This revised helical pier shall be installed at least 3 ft (0.9 m) beyond the termination depth of the original helical pier.

VII. Connection Bracket/Haunch

A. The helical pier shall be connected to the structure using a Chance approved steel bracket or properly designed steel-reinforced concrete haunch capable of safely transferring the structural loads to the helical pier.

VIII. Installation Records

Written installation records shall be maintained for each helical pier. These records shall include, but are not limited to the following:

A. Project name and/or location

B. Name of authorized Chance Dealer

C. Name of Dealer's foreman or representative who witnessed the installation

D. Date and time of installation

E. Location and reference number of helical pier

F. Descriptions of lead section and extensions installed

G. Overall depth of installation as referenced from bottom of grade beam or footing

H. Torque readings for the last 3 ft (0.9 m) of installation at 1 ft (0.3 m) intervals if practical. In lieu of this requirement, the termination torque shall be recorded as a minimum

I. Any other applicable information relating to the installation

IX. Helical Pier Testing

A. Testing shall be required only if specified on the Plan of Repair or if deemed necessary by the Engineer of Record due to unusual subsurface conditions.

B. Testing, if required, shall be performed in accordance with the test plan contained in the Plan of Repair or, if required by the Engineer of Record due to unusual subsurface conditions, in accordance with the test plan set forth by the Engineer of Record prior to the beginning of the test.

C. The test plan shall include, but not be limited to, the following:

1. The number and locations of tests, based on site and subsurface conditions

2. The maximum load to be applied during the test

3. The acceptance criteria including load versus displacement.

D. The test equipment shall be capable of applying a compression load equal to the maximum test load specified in the test plan.

E. If the compression test requires additional helical piers for reaction, these helical piers shall be installed to the same torque requirements as the test helical pier.

F. The helical pier shall be tested to the greater of the safety factored load or its ultimate capacity, defined as the maximum load the helical pier can resist at continuous creep conditions.

G. Test records shall include the following:

1. Items as outlined in Section VIII of this Specification

2. Magnitudes of applied loads and corresponding displacements

MATERIAL SPECIFICATIONS
CHANCE® Helical Pier Foundation System Components
Page 1 of 2

SS5, SS150 - 1½" (38 mm)
SS175 - 1¾" (44 mm)
278 - 2⅞" (73 mm) OD Pipe Shaft

HELIX BEARING PLATE:

1. SS5 - Hot rolled carbon steel sheet, strip, or plate per ASTM A572, or A1018, or A656 with minimum yield strength of 50 ksi (345 MPa). Plate thickness is ⅜" (9.5 mm).

2. SS150 and SS175 - Hot rolled steel sheet, strip, or plate per ASTM A656 or A1018 with minimum yield strength of 80 ksi (552 MPa). Plate thickness is ⅜" (9.5 mm).

3. 278 - Hot rolled steel sheet, strip, or plate per ASTM A36 or A572 with minimum yield strength of 36 ksi (248 MPa). Plate thickness is ⅜" (9.5 mm).

4. Helix bearing plates are formed on matching metal dies to true helical shape.

HELICAL PIER SHAFT:

1. SS5 - Hot rolled **R**ound-**C**ornered-**S**quare (RCS) 1½" (38 mm) solid steel shafts conforming to the general requirements of ASTM A29. Medium carbon steel grade with improved strength due to fine grain size.

   - Installation Torque Rating: 5,500 ft-lb (7,500 Nm)
   - Minimum Ultimate Tension Strength: 70 kips (312 kN) (Criteria - Coupling Bolt)
   - Minimum Ultimate Tension Strength: 55 kips (245 kN) (Criteria - Torque)

2. SS150 (1½" (38 mm) solid steel shaft), and SS175 (1¾" (44 mm) solid steel shaft) - Hot rolled Round-**C**ornered-**S**quare (RCS) conforming to the general requirements of ASTM A29. **H**igh **S**trength **L**ow **A**lloy (HSLA), low to medium carbon steel grade with improved strength due to fine grain size.

SS Anchor Type	Torque Strength Rating, ft-lb (Nm)	Minimum Ultimate Tension Strength, kips (kN)
SS150	7,000 (9,500)	70 (312)
SS175	10,000 (13,600)	100 (445)

3. 278 - Structural steel tube or pipe, welded or seamless, in compliance with ASTM A500. Wall thickness is 0.203" (5.16 mm) (Schedule 40). Torque strength rating is 5,500 ft-lb (7,500 Nm). Minimum yield strength is 50 ksi (345 MPa). Minimum ultimate tension/ compression strength is 60 kip (267 MPa).

MATERIAL SPECIFICATIONS
CHANCE® Helical Pier Foundation System Components
Page 2 of 2

COUPLING BOLTS:

1. SS5, SS150 - ¾" (19 mm) diameter bolt per ASTM A320 Grade L7, S_y (min) = 105 ksi (724 MPa), S_u (min) = 125 ksi (862 MPa).

2. SS175 - ⅞" (22 mm) diameter bolt per ASTM A193 Grade B7, S_y (min) = 105 ksi (724 MPa), S_u (min) = 125 ksi (862 MPa).

3. 278 - ¾" (19 mm) diameter bolt per SAE J429 Grade 5, S_y (min) = 92 ksi (634 MPa), S_u (min) = 120 ksi (827 MPa).

EXTENSION SECTION COUPLINGS:

1. Shall be formed as integral part of the plain extension shaft material. For SS anchors, couplings shall be hot upset forged sockets.

2. Shall be formed as integral part of the plain extension shaft material. For 278 material, couplings shall be hot upset expanded sockets.

FOUNDATION REPAIR BRACKET:

1. Brackets are formed from steel that meets or exceeds the requirements of ASTM A36, and have a hot-dipped galvanized coating per ASTM A153.

WELDING:

1. All welding shall be in accordance with AWS D1.1, latest revision.

2. All welders shall be Chance certified to AWS specifications.

FINISH, GALVANIZED:

1. All material shall be hot-dipped galvanized in accordance with ASTM A153 after fabrication.

MODEL SPECIFICATION

ATLAS RESISTANCE® STANDARD, HEAVY DUTY and MODIFIED 2-PIECE PIER SYSTEMS

© 2006, Hubbell Incorporated
All Rights Reserved

THIS PAGE LEFT BLANK INTENTIONALLY

Atlas Resistance® Standard, Heavy Duty and Modified 2-Piece Systems

- AP-2-UF-2875.165
- AP-2-UF-2875.165M (Modified)
- AP-2-UF-3500.165
- AP-2-UF-3500.165M (Modified)
- AP-2-UF-4000.219
- AP-2-UF-4500.237

Atlas Resistance® 2-Piece Plate Pier Systems

FLAT PLATE PIERS

- AP-2-PP-2875.165
- AP-2-PP-2875.165 (Modified)
- AP-2-PP-3500.165
- AP-2-PP-3500.165M (Modified)
- AP-2-PP-4000.219
- AP-2-PP-4500.237

CURVED PLATE PIERS

- AP-2-PPRC-2875.165
- AP-2-PPRC-3500.165M (Modified)
- AP-2-PPRC-4000.219

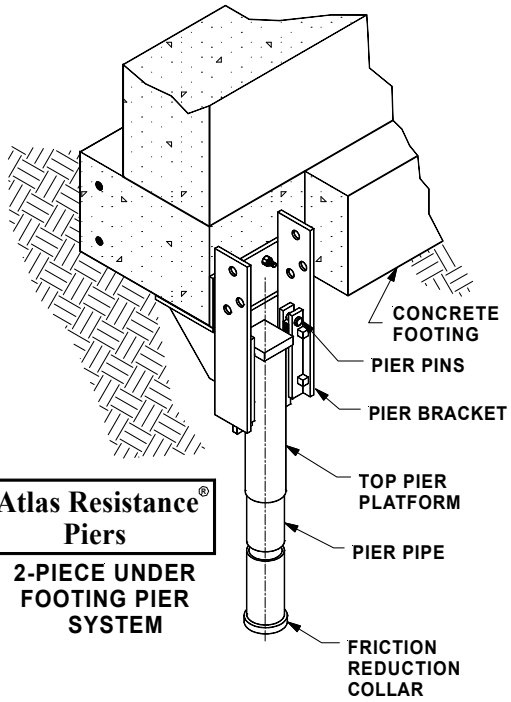

Atlas Resistance® Piers
2-PIECE UNDER FOOTING PIER SYSTEM

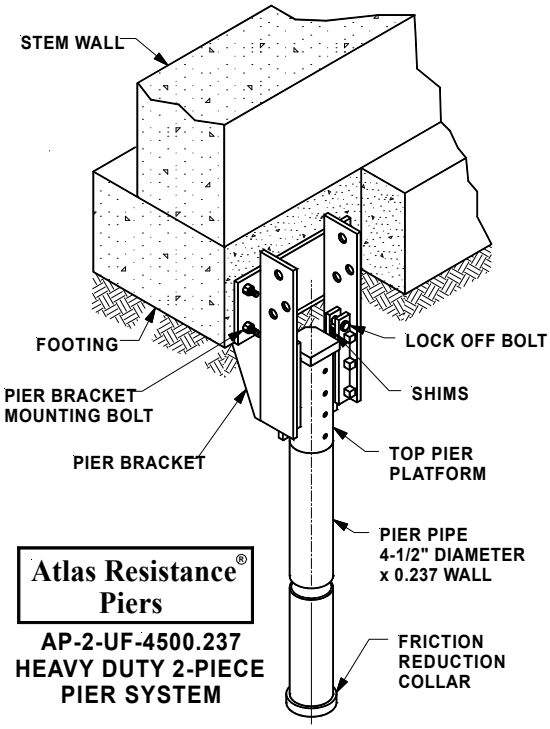

Atlas Resistance® Piers
AP-2-UF-4500.237
HEAVY DUTY 2-PIECE PIER SYSTEM

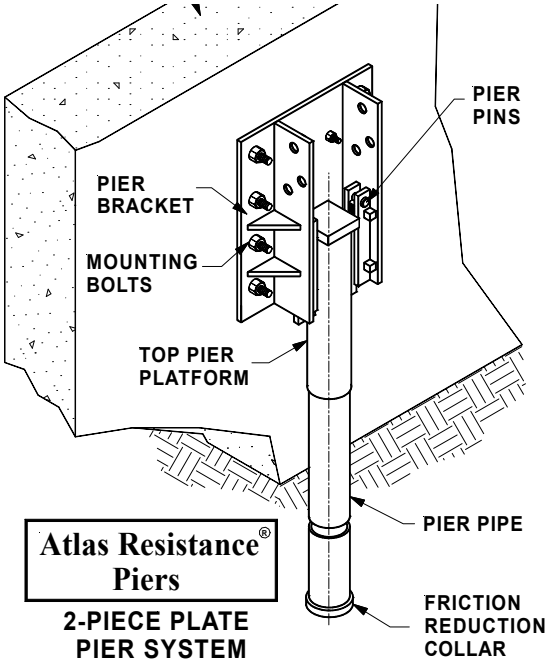

Atlas Resistance® Piers
2-PIECE PLATE PIER SYSTEM

© 2006, Hubbell Incorporated
All Rights Reserved

THIS PAGE LEFT BLANK INTENTIONALLY

MODEL SPECIFICATION
ATLAS RESISTANCE® STANDARD, HEAVY DUTY, AND MODIFIED 2-PIECE PIER SYSTEMS

1 GENERAL

1.1 SCOPE of WORK

This work consists of furnishing all labor, tools, equipment and materials associated with the preparation and installation of Atlas Resistance® 2-Piece Piers according to the specifications contained herein. The work includes, but is not limited to, the following:

a. Diligent investigation of the possible existence and location of underground utilities situated at or near the area of work;
b. All soil excavation;
c. Preparation of the footing and stem wall or foundation grade beam;
d. Mounting the pier bracket including the drive stand assembly with concrete anchors;
e. Installation of pier sections to designed specifications;
f. Cutting the last extension section to the specified elevation, if required, and installing sleeving (optional);
g. Installation of the top pier platform and two-piece lift head assembly;
h. Lifting of the structure with hydraulic rams and the restoration of the structure to a permanent elevation;
i. Replacement of the soil and general site clean up.

1.2 REFERENCES

a. CHANCE® Civil Construction Technical Design Manual, latest version.
b. National Evaluation Service, Inc. (NES) National Evaluation Report No. NER-579; Atlas Piers AP-2-UF3500.165 Series and AP-2-UF-3500.165M Series
c. ASTM Standard Specifications, most recent versions.
   (1) ASTM A29 Standard Specification for Steel Bars, Carbon and Alloy, Hot Wrought and Cold Finished
   (2) ASTM A36 Standard Specification for Carbon Structural Steel
   (3) ASTM A53 Standard Specification for Welded and Seamless Steel Pipe
   (4) ASTM A500B Standard Specification for Cold Formed Welded and Seamless Carbon Steel Structural Tubing in Rounds and Shapes
   (5) ASTM A513 Standard Specification for Electric Resistance Welded Carbon and Alloy Steel Mechanical Tubing
   (6) ASTM A572 Standard Specification for High Strength Low Alloy Columbium –Vanadium Structural Steel

1.3 DELIVERY, STORAGE and HANDLING

All pier materials shall be handled and transported carefully to prevent any deformation or damage. Care should be taken to prevent the accumulation of dirt, mud or other foreign matter on the steel materials. Such accumulation shall be completely removed prior to installation.

2 MATERIAL

2.1 PIER BRACKET

2.1.1 Standard 2-Piece Pier Bracket (AP-2-UF-2875.165 and -2875.165M Piers)

The pier bracket for the 2-7/8" diameter pier shall be a welded assembly of 5/8" and 1/2" thick steel plates conforming to ASTM A36. The pier bracket shall provide 69 in^2 of bearing surface against the bottom of the footing and a minimum of 48 in^2 against the vertical face of the foundation. The pier bracket shall have guides for the top pier platform, two 9/16" diameter bracket mounting holes, two 11/16" diameter pier pin holes and four 1-1/32" diameter alignment and equipment mounting holes.

2.2.1 Standard 2-Piece Pier Bracket (AP-2-UF-3500.165, -3500.165M, and -4000.219 Piers)

The pier bracket for the 3-1/2" or 4" diameter pier shall be a welded assembly of 5/8" and 1/2" thick steel plates conforming to ASTM A36. The pier bracket shall provide 74 in^2 of bearing surface against the bottom of the footing and a minimum of 59 in^2 against the vertical face of the foundation. The pier bracket shall have guides for the top pier

platform, two 9/16" diameter bracket mounting holes, two 11/16" diameter pier pin holes and six 1-1/32" diameter alignment and equipment mounting holes.

2.1.3 Heavy Duty 2-Piece Pier Bracket (AP-2-UF-4500.237 Pier)

The pier bracket shall be a welded assembly of 1", 5/8" and 1/2" thick steel plates conforming to ASTM A36. The pier bracket shall provide 74 in^2 of bearing surface against the bottom of the footing and a minimum of 128 in^2 against the vertical face of the foundation. The pier bracket shall have guides for the top pier platform, four 9/16" diameter bracket mounting holes, two 7/8" diameter pier pin holes and six 1-1/32" diameter alignment and equipment mounting holes.

2.1.4 Flat 2-Piece Plate Pier Bracket (AP-2-PP-2875.165 and AP-2-PP-2875.165M Piers)

The pier bracket shall be a welded assembly of 5/8" and 1/2" thick steel plates conforming to ASTM A36. The pier bracket shall provide 270 in^2 of surface contact against a vertical face of the stem wall or column. The pier bracket shall have guides for the top pier platform, eight 7/8" diameter bracket mounting holes, two 11/16" diameter pier pin holes and six 1-1/32" diameter alignment and equipment mounting holes.

2.1.5 Flat 2-Piece Plate Pier Bracket (AP-2-PP-3500.165, -3500.165M and -4000.219 Piers)

The pier bracket shall be a welded assembly of 5/8" and 1/2" thick steel plates conforming to ASTM A36. The pier bracket shall provide 320 in^2 of surface contact against a vertical face of the stem wall or column. The pier bracket shall have guides for the top pier platform, eight bracket mounting holes consisting of four 7/8" diameter and four 1-1/8" diameter holes, two 11/16" diameter pier pin holes and six 1-1/32" diameter alignment and equipment mounting holes.

2.1.6 Curved 2-Piece Plate Pier Bracket (AP-2-PPRC-2875.165, -3500.165M and -4000.219 Piers)

The AP-2-PPRC series of pier brackets are constructed as specified in Section 2.1.4 and 2.1.5 with the exception that the plate that mounts against the circular column shall be custom fabricated to conform to the diameter of the column.

2.2 ANCHOR BOLTS

2.2.1 2-Piece Underfooting Pier Anchor Bolts

Each underfooting pier bracket requires two 1/2" diameter by 5-1/2" long (minimum) steel concrete expansion bolts (four required for the 4-1/2" diameter heavy duty 2-piece pier), cadmium plated with an ultimate pullout capacity of 8,000 lbs in 3,000 psi concrete. Minimum embedment shall be 3-1/2". The anchor bolts shall be supplied with a flat washer and nut. The drive stand requires two (minimum) 1/2" diameter by 5-1/2" long (minimum) steel concrete expansion bolts (Hilti Kwik Bolt II Expansion Anchors or equivalent) for temporary mounting during pier installation. Bolts are required for mounting only.

2.2.2 2-Piece Plate Pier Anchor Bolts (AP-2-PP-2875.165 and AP-PPRC-2875.165 Piers)

Each pier bracket requires eight 3/4" diameter by 7-1/2" long steel cadmium plated concrete expansion bolts, (Hilti Kwik Bolt II Expansion Anchors or equivalent), with a minimum embedment of 4-3/4". Ultimate pullout capacity shall be 15,000 lbs in 3,000 psi concrete. Anchor bolts shall be supplied with a flat washer and nut.

2.2.3 2-Piece Plate Pier Anchor Bolts (All other AP-2-PP- and AP-2-PPRC- Series Piers)

Each pier bracket requires four 3/4" diameter by 7-1/2" long cadmium plated steel concrete expansion bolts (Hilti Kwik Bolt II Expansion Anchors or equivalent) with a minimum embedment of 4-3/4". Ultimate pullout capacity shall be 15,000 lbs in 3,000 psi concrete; and four 1" diameter by 9" long cadmium plated steel concrete expansion bolts (Hilt Kwik Bolt II Expansion Anchors or equivalent) with a minimum embedment 5-1/2". Ultimate pullout capacity shall be 22,000 lbs in 3,000 psi concrete. (Lighter bolt designs may be used with lighter load applications if approved by the engineer.) Anchor bolts shall be supplied with a flat washer and nut.

2.3 GROUT (Optional)

2.3.1 Pressure Bearing Grout

Quick setting premixed mortar with a 4,500 psi minimum three day strength (Master Builder's 713 Non-Shrink Grout or equivalent).

2.3.2 Flowable Pipe Grout

Quick setting, neat cement flowable grout with a 4,000 psi (minimum), three day strength.

2.3.3 Flowable Grout Fill

The grout slurry shall consist of sand, soil or other suitable void fill material mixed with any recognized lubricant such as 12% cement (2-1/2 sack mix), bentonite or other lubricant to promote proper flow characteristics.

2.4 DRIVE STAND ASSEMBLY

The drive stand assembly is a welded steel frame with a double acting hydraulic actuator capable of pressing the 42" long steel pier sections through the soil to a load bearing strata. The drive stand assembly is temporarily attached to the pier bracket by means of 1" diameter by 2-3/4" long high strength locking pins. Attach the drive stand assembly to the wall using two (minimum) 3/4" diameter by 7-1/2" long (minimum) anchor bolts to provide drive cylinder alignment and stability.

2.5 PIER SECTION

2.5.1 Pier Section (2-7/8” Diameter x 0.165” Wall Thickness)

Each pier section shall be fabricated from a 2-7/8" OD by 42" long, mill rolled, induction heat treated, steel section with a 0.165" wall thickness. The initial section shall have a 1" long collar welded to the lead end of the pipe with a 3-1/2" OD to assist in reducing wall friction during driving of the pier to capacity. The pier sections that follow shall each have a coupling welded to one end. Steel in this section shall conform to ASTM A500 Grade B.

2.5.2 Standard Pier Section (3-1/2” Diameter x 0.165” Wall Thickness)

Each pier section shall be fabricated from a 3-1/2" OD by 42" long mill rolled galvanized steel section with a 0.165" wall thickness. A triple coat corrosion protection of zinc chromate and clear polymer coating shall be provided. The initial section shall have a 4" OD by 1" long collar welded to the lead end of the pipe to assist in reducing wall friction during driving of the pier to capacity. The pier sections that follow shall each have a coupling welded to one end. Steel in this section shall conform to ASTM A500 Grade B.

2.5.3 Pier Section (4” Diameter x 0.219” Wall Thickness)

Each pier section shall be fabricated from a 4" OD by 42" long mill rolled steel section with a 0.219" wall thickness. The initial section shall have a 4-1/2" OD by 1" long collar welded to the lead end of the pipe to assist in reducing wall friction during driving of the pier to capacity. The pier sections that follow shall each have a coupling welded to one end. Steel in this section shall conform to ASTM A500 Grade B.

2.5.4 Heavy Duty Pier Section (4-1/2” Diameter x 0.237” Wall Thickness)

Each pier section shall be fabricated from a 4-1/2" diameter, 0.237" wall pipe. The initial section shall have a 5" OD by 1" long collar welded to the lead end of the pipe to assist in reducing wall friction during driving of the pier to capacity. The pier sections that follow shall each have a coupling welded to one end. Steel in this section shall conform to ASTM A500 Grade B.

2.6 COUPLING

The pier coupling shall be a 6" long tubular steel section of suitable diameter to fit inside the pier section. The coupling shall be inserted and attached 3" inside one end of each pier section that follows the initial pier section. The remaining 3" of the coupling extends beyond the pier section. All components shall conform to ASTM A513 or ASTM A500 Grade B. The coupling shall be attached by an embossed mechanical connection or by plug welding the coupling to the pier pipe.

2.7 MODIFIED SLEEVE PIER SECTION (Modified Pier Only)

The modified sleeve pier section shall be fabricated from a 3-1/2" diameter, 0.216" thick wall or 4" diameter, 0.219 inch thick wall mill rolled steel pipe, by 42 inches long. The pipe sleeve is mounted over the last pier section and is used to increase the moment transfer capacity from the Top pier Platform to the pier section. Steel in this section shall conform to ASTM A500 Grade B or A53.

2.8 PIER SLEEVING (Optional)

Pier sleeving is used to stiffen the segmented joints through areas of weak soils. Depending upon the product, the sleeve sections shall be fabricated from 3" diameter, Schedule 40 pipe, or 4" diameter, 0.219" thick wall mill rolled steel pipe, or 4-1/2" diameter, 0.237" thick wall mill rolled steel pipe 42" long. The sleeving shall be driven over the pier sections through any area of weak soils. The sleeving shall be installed in such a manner that the joints in the pier and the joints in the sleeving shall be staggered by at least 18". Steel in this section shall conform to ASTM A53, ASTM A500 Grade B.

2.9 TOP PIER PLATFORM

2.9.1 Top Pier Platform for Standard, Modified and Plate Piers

The standard pier platform shall be a welded assembly consisting of a steel tube of suitable size to fit over the pier section that shall form the cap cylinder. The length of the tube shall be 16-5/8" long for the 2-7/8" diameter pier products and 17-3/4" long for others with the exception of the 4" diameter modified pier system, which shall have a tube 41-3/4" long. The cap cylinder shall have two 10" long (8" long for 2-7/8" diameter pier products) by 5/8" thick steel plates welded as vertical stabilizers to the sides of the steel cap cylinder. The top of the top pier platform shall be a 1" thick (3/4" thick for 2-7/8" diameter pier products) steel plate welded to the top of the cap cylinder. All steel elements shall conform to ASTM A36, ASTM A53, or ASTM A500 Grade B.

2.9.2 Top Pier Platform for AP-2-UF-4500.237

A 4" outside diameter by 20" long steel pipe shall be welded to the inside of a 4-1/2" OD by 10" long steel pipe to form the cap cylinder. The cap cylinder shall have two 9-1/2" long by 5/8" thick steel plates welded as vertical stabilizers to the sides of the steel cap cylinder. At the top of the top pier platform shall be a 1" thick steel plate welded to the top of the cap cylinder. All steel elements shall conform to ASTM A36, ASTM A500 Grade B.

2.10 HIGH STRENGTH PIER PINS – LOCK OFF BOLTS

2.1.1 High Strength Pier Pins for Standard, Modified and Plate Piers

Two 5/8" diameter by 3" long high strength, heat treated cadmium plated pier pins (HDW-PIN-5/8[G][0'-3]) are required per pier. The pier pins conforming to ASTM A29 Grade 10B21 are required for each pier. The pins shall be quenched and tempered to HRC 36± and capable of providing 55,000 pounds of ultimate shear resistance in double shear configuration.

2.1.2 High Strength Lock Off Bolts for AP-2-UF-4500.237

Two 3/4" diameter by 4" long high strength hex bolts are used as pier pins. The bolts shall conform to SAE J429 and be equivalent to Grade 8.

2.11 LIFT SHIMS

The lift shims shall be 7 gauge, 5/8" by 1-1/2" long cadmium plated hot rolled steel. Lift shims are used as required up to a maximum height of 4"s. Final adjustments shall be made with one or two 16 gauge, 5/8" by 1-1/2" long cadmium plated hot rolled steel shims. The steel shall conform to ASTM A36.

2.12 TWO PIECE LIFT HEAD ASSEMBLY

The two piece lift head shall be a welded assembly that consists of 5/8" thick and 1" thick steel plates and is capable of providing the required resistance capacity for load transfer. The two piece lift head assembly is temporarily attached to the pier bracket by means of six high strength pins and locking clips measuring 1" in diameter by 2-3/4" long (four required for the 2-7/8" diameter products). The pins are inserted through matching 1-1/32" diameter holes in the pier bracket.

2.13 LATERAL SUPPORT DEVICE (Under Footing Brackets - AP-2-UF-Series Only)

The lateral support device is a specialized tool used to provide a horizontal force to the bottom of the under footing pier bracket during pier section installation. The lateral support device helps counteract the torque developed between the structure and the pier bracket during pier section installation. The lateral support device is a welded assembly of steel plate and tubing. Its length is adjustable by means of a hand thread and a steel pin inserted through adjustment holes in the lateral support device.

2.14 WELDMENTS

All welded connections shall conform to the requirements of the American Welding Society (AWS) publication "Structural Welding Code AWS D1.1", and applicable revisions.

[This page Rev. Apr/2007]

3 EXECUTION

The following is intended to provide the controlling specification for the installation of each Atlas Resistance® Pier System.

WARNING! THOROUGHLY INVESTIGATE THE PRESENCE AND LOCATION OF ALL UNDERGROUND UTILITIES SITUATED AT OR NEAR THE AREA OF WORK BEFORE PROCEEDING. SERIOUS INJURY MAY RESULT FROM FAILURE TO LOCATE AND AVOID CONTACT WITH UNDERGROUND UTILITIES.

COLLAPSE OF SOIL CAN CAUSE VERY SERIOUS INJURY. DO NOT ENTER ANY EXCAVATION IF THERE ARE ANY QUESTIONS ABOUT THE STABILITY OF THE SOIL MASS. CONTACT THE ENGINEER OF RECORD OR CAREFULLY FOLLOW OSHA REQUIREMENTS AND/OR LOCAL REGULATIONS.

THE DRIVE STAND AND DRIVE CYLINDER ARE VERY HEAVY. USE PROPER LIFTING AND HANDLING TECHNIQUES. BE CONSTANTLY AWARE OF THE DRIVE CYLINDER'S POSITION IN THE DRIVE STAND AND THE ALIGNMENT OF THE PIER SYSTEM COMPONENTS. DO NOT LET THE CYLINDER WORK ITS WAY OUT OF POSITION. MONITOR THE FOOTING AND STRUCTURE CLOSELY FOR CRACKS. DO NOT EXCEED THE HYDRAULIC CYLINDER MANUFACTURER'S WORKING PRESSURE WHEN DRIVING THE PIER SECTIONS. BEWARE OF HOT, HIGH-PRESSURE HYDRAULIC OIL. SERIOUS INJURY MAY RESULT FROM NOT FOLLOWING PROPER SAFETY TECHNIQUES.

3.1 EXPOSURE of FOOTING or GRADE BEAM

An area shall be excavated immediately adjacent to the building foundation to expose the footing, bottom of the grade beam, stem wall or column to a width of at least 36" and at least 15" beneath the proposed elevation of the base of the pier bracket. A chipping hammer shall be used to smooth and prepare the foundation for mounting of the pier bracket. The stem wall or column shall be smooth and vertical at the mounting location for the plate pier bracket. The vertical and bottom face of the footing shall, to the extent possible, be smooth and at right angles to each other for mounting the under-footing bracket. The spread footing, if present, shall be notched to allow the AP-2-UF-Series Pier Bracket to mount directly under the bearing load of the stem wall, or shall be core drilled to allow the pier pipe from the AP-2-PP-Series Plate Pier to be installed. DO NOT cut any reinforcing steel in the footing element without approval from the engineer. The surfaces shall be smooth, free of all dirt, debris, and loose concrete so as to provide firm bearing surfaces for the pier bracket.

3.2 INSTALLATION of the PIER BRACKET

WARNING! CAREFULLY SPACE THE PIER BRACKETS ALONG THE FOOTING SO THAT THE STRUCTURE IS NOT OVER-SPANNED. EXCESSIVE PIER SPACING CAN CAUSE DAMAGE TO THE CONCRETE FOOTING, STEM WALL AND/OR SLAB FROM STRUCTURAL OVERLOAD. ENSURE THAT THE NECESSARY EXISTING STRUCTURAL CONSIDERATIONS HAVE BEEN ADDRESSED BEFORE ATTEMPTING TO LIFT OR STABILIZE A STRUCTURE.

3.2.1 Installation of the Under-Footing 2-Piece Pier Bracket

The pier bracket shall be temporarily mounted to the drive stand assembly using 1" diameter pins and retaining clips. The assembly is lowered into the excavation adjacent to the foundation. The pier bracket shall then be positioned and seated flush against the face and bottom of the footing using a hydraulic actuator or ram. The pier bracket is then fastened to the footing with two expansion anchor bolts. If the pier bracket does not have continuous bearing support on either the vertical or horizontal face, then pressure bearing grout shall be used to provide proper bearing prior to driving the pier. Care should be exercised to ensure that the drive stand assembly frame is plumb prior to driving each pier section. A carpenter's level may be used to verify vertical alignment in both planes.

WARNING! INCORRECT PREPARATION OF THE FOOTING MAY ALLOW THE PIER BRACKET TO ROTATE AND SHEAR THE MOUNTING BOLTS. ROTATION OF THE PIER BRACKET CAN DAMAGE THE FOOTING, PIER, AND INSTALLATION EQUIPMENT. IN ADDITION, SERIOUS INJURY MAY OCCUR FROM FALLING EQUIPMENT DURING PIER INSTALLATION FROM BROKEN BOLTS.

Install a lateral support device between the bottom, front side of the pier bracket and the vertical wall of the excavation opposite the pier. During installation of the pier sections, maintain support against the pier bracket with the lateral support device.

3.2.2 Installation of the 2-Piece Plate Pier Bracket

A bolt template shall be prepared to properly locate, mount and align the pier bracket at the location directed by the designer and, if a spread footing is present, directly over a cored hole installed through the footing element. When the anchor bolt locations are marked, the four 3/4" diameter x 7-1/2" long bolts shall be installed to a minimum embedment of 4-3/4" and the four 1" diameter x 9" long bolts shall be installed to a minimum embedment of 5-1/2" into the vertical face, unless otherwise directed by the engineer. (Note: The AP-2-PP-2875.165 pier requires only 3/4" diameter bolts.) The plate pier bracket shall be installed with the nuts and washers provided with the anchor bolts. The longer bolts mount to the lower holes. Follow manufacturer's recommendations for bolt installation and maintain maximum embedment of the bolts. If the pier bracket does not have continuous bearing support on the vertical face, then pressure bearing grout shall be used to provide proper bearing prior to driving the pier. Care should be exercised to ensure that the pier bracket is plumb. A carpenter's level may be used to verify the vertical alignment.

3.3 DRIVING and TESTING PIER SECTIONS

WARNING! ENSURE THAT THE HYDRAULIC HOSES ARE PROPERLY CONNECTED TO THE REMOTE CONTROL VALVE. BE SURE THAT THE REMOTE CONTROL VALVE AND THE CONTROL VALVE ON THE PUMP ARE PLACED IN THE NEUTRAL (CENTER) POSITION BEFORE STARTING PUMP. OPERATE THE SYSTEM WITH THE PUMP CONTROL VALVE IN THE "B" POSITION ONLY. EQUIPMENT DAMAGE AND/OR SERIOUS PERSONAL INJURY MAY RESULT FROM IMPROPER HOSE CONNECTIONS OR FAILURE TO POSITION VALVES PROPERLY.

3.3.1 Driving of Pier sections

All pier sections shall be continuously driven by use of the drive stand and hydraulic cylinder assembly. The initial pier section shall have the friction reduction collar on the bottom end. Additional pier sections shall be added as the pier driving operation continues. Driving of the pier sections will continue until rock or a suitable bearing stratum is reached as defined by a force equal to 1.65 times the working load specified by the engineer or until lift of the structure is achieved, whichever is less.

WARNING! CHECK TIGHTNESS OF PIER BRACKET MOUNTING BOLTS OFTEN DURING PIER SECTION AND SLEEVE INSTALLATION. SERIOUS INJURY MAY RESULT FROM LOOSE BOLTS.

DO NOT EXCEED THE HYDRAULIC CYLINDER MANUFACTURER'S WORKING PRESSURE WHEN DRIVING THE PIER SECTIONS, ESPECIALLY WITH THE RAM FULLY EXTENDED. SERIOUS INJURY MAY RESULT.

If the maximum hydraulic cylinder operating pressure is reached prior to bearing stratum verification, remove the double acting hydraulic actuator from the drive stand assembly and replace it with a 2" x 4" x 7-1/8" supplemental block. Install a 25 or 50 ton hydraulic ram (depending upon Proof Load force required) between the last pier section and the supplemental block. The hydraulic ram shall be actuated with a hand pump until bearing strata is verified as defined by a maximum installation force of 1.65 times the designed working load. The installation force shall not exceed:

AP-2-UF-2875.165 and AP-2-PP-2875.165 (Standard 2-7/8" dia Pier Systems)	= 49,500 lbs.,
AP-2-UF-2875.165M and AP-2-PP-2875.165M (Modified 2-7/8" dia Pier System)	= 57,750 lbs.,
AP-2-UF-3500.165 and AP-2-PP-3500.165 (Standard 3-1/2" dia Pier Systems)	= 70,950 lbs.,
AP-2-UF-3500.165M (Modified 3-1/2" dia Pier System)	= 75,075 lbs.,
AP-2-PP-3500.165M (Modified 3-1/2" dia Pier System)	= 74,250 lbs.,
AP-2-UF-4000.219 (Standard 4" dia Pier System)	= 80,850 lbs.,
AP-2-PP-4000.219 (Standard 4" dia Pier System)	= 84,975 lbs.,
AP-2-UF-4500.237(Standard 4-1/2" dia Heavy Duty Pier System)	= 116,325 lbs.
AP-2-PP-4500.237 (Standard 4-1/2" dia Heavy Duty Pier System)	= 92,400 lbs.

or until lift of the structure is achieved, whichever is less.

3.3.2 Proof Load Testing (Optional)

To accomplish field load testing of the installed pier, CHANCE® Civil Construction recommends bearing capacity confirmation of 1.5 times the designed working load. This operation verifies a Factor of Safety of 1.5:1 on the field installation.

Proof Loading the pier may be accomplished by either installing a 2” x 4” x 7-1/8” supplemental block in place of the hydraulic drive cylinder on the drive stand or mounting a lift head on the pier bracket of existing work. Install a 25 or 50 ton hydraulic ram (depending upon Proof Load force required) between the pier and the supplemental block or lift head. The hydraulic ram shall be actuated with a hand pump until bearing strata is verified as defined by a maximum installation force of 1.5 times the designed working load not to exceed 1.5 times the maximum published working capacity. Do not exceed these maximum Proof Loads:

AP-2-UF-2875.165 and AP-2-PP-2875.165 (Standard 2-7/8” dia Pier Systems)	= 45,000 lbs.,
AP-2-UF-2875.165M and AP-2-PP-2875.165M (Modified 2-7/8” dia Pier System)	= 52,500 lbs.,
AP-2-UF-3500.165 and AP-2-PP-3500.165 (Standard 3-1/2” dia Pier Systems)	= 64,500 lbs.,
AP-2-UF-3500.165M (Modified 3-1/2” dia Pier System)	= 68,250 lbs.,
AP-2-PP-3500.165M (Modified 3-1/2” dia Pier System)	= 67,500 lbs.,
AP-2-UF-4000.219 (Standard 4” dia Pier System)	= 73,500 lbs.,
AP-2-PP-4000.219 (Standard 4” dia Pier System)	= 77,250 lbs.,
AP-2-UF-4500.237 (Standard 4-1/2” dia Heavy Duty Pier System)	= 105,750 lbs.
AP-2-PP-4500.237 (Standard 4-1/2” dia Heavy Duty Pier System)	= 84,000 lbs.,

or until lift of the structure is achieved, whichever is less.

3.3.3 Cutting Final Pier Section

It is likely that the final installed pier section will have to be removed from the hole and cut to a length suitable to provide space for installing the top pier platform. Mark and cut the pier section to the proper length using a metal cutting saw capable of a smooth cut at 90° to the length of the pier section. After cutting to length, the final pier section is replaced. Note: If modified sleeving is to be installed, the pier pipe shall be cut 1” shorter to allow clearance of the internal ring of the modified sleeve pipe.

3.3.4 Drive Equipment Removal

The drive stand assembly is then removed from the pier bracket by removing the 1" diameter locking pins.

NOTE: If a modified pier is being installed, or if the pier is to be sleeved, perform the operations in paragraph 3.4 before removing the drive stand assembly.

3.4 DRIVING of PIPE SLEEVE (Optional)

NOTICE: Current CHANCE® Civil Construction practice is to limit the unsupported pier pipe exposure to a maximum of 2 feet at the published working loads for the standard pier systems. The soil must have a Standard Penetration Test “N” of greater than 4. The pier pipe must be sleeved for pier pipe exposures greater than 2 feet and up to 6 feet and/or through the depths where the Standard Penetration Test value “N” is 4 or less. Sleeve must extend at least 36” beyond the unsupported exposure and/or the area of weak soil.

When the capacity of the pier is achieved, the drive stand assembly is used to push the pier sleeving over the last pier section(s). Locate the modified sleeve that contains an internal ring at one end and reserve it as the last piece of sleeve to be installed. This sleeve will likely need to be cut to ensure that the joints between the pier pipe and sleeving do not align. The joints between the pier sleeves and pier sections should be staggered a minimum of 18". Prior to driving any of the plain sleeving (without internal ring), measure the length of the final piece of pier pipe that was cut in section 3.3.3 above. Cut the modified sleeve pipe (that contains the internal ring) as follows:

a. If the final length of pier pipe is less than 24" but greater than 18" long, the full length of the modified sleeve is required. Do not cut the modified sleeve pipe
b. If the final length of pier pipe is less than 18" long, cut the length of modified sleeving to a length of 18" plus the final length of pier pipe (measuring from the end of the modified sleeve that contains the internal ring).
c. If the final length of pier pipe is more than 24" long, cut the length of modified sleeving to a length of 42" minus the final length of pier pipe (measuring from the end of the modified sleeve that contains the internal ring).

Installation of sleeve pipe shall be as follows: Install the length of sleeve pipe left over from cutting the modified sleeve followed by the required full lengths of sleeve pipe and then the modified sleeve section with the internal ring. The internal ring shall bear upon the top of the pier pipe when fully installed.

The drive stand and hydraulic cylinder assembly with the proper drive head attached to match the sleeve pipe diameter shall be used to push the modified sleeving over the pier sections. Sleeving shall extend to the depth specified by the engineer, but in no case less than the depth of the proposed cut, exposure, or thickness of weak soil plus three feet. **DO NOT exceed the manufacturer’s rated operating capacity for the hydraulic cylinder during installation of sleeve pipe.** When the pipe sleeve(s) are installed, the drive stand assembly is removed from the pier bracket by removing the 1" diameter locking pins.

3.5 INSTALLING PIPE GROUT (Optional)

When the pier is installed to load bearing stratum, proof load tested and cut to the proper elevation, a flowable neat cement grout may be installed to the pier pipe. The grout will increase the moment of inertia (stiffness) and corrosion resistance of the pier. The grout shall be introduced to the bottom of the pier by means of a tube inserted into the pier pipe. As the grout is pumped into the pier pipe the grouting tube shall be raised as the elevation of the grout increases. The process shall be executed carefully so that air is not entrapped in the grout.

3.6 INSTALLATION of the TOP PIER PLATFORM

The top pier platform shall be installed over the last installed pier section. Align the vertical stabilizers of the top pier platform within the channels on the legs of the pier bracket and tap the top pier platform until it contacts the top of the final pier section. A small port is provided between the cap cylinder and the platform to verify contact.

3.7 INSTALLATION of the TWO PIECE LIFT HEAD ASSEMBLY

The two piece lift head assembly is temporarily attached to the pier bracket by aligning the holes in each piece. One inch diameter pins and clips are used to align and temporarily hold the two pieces together.

3.8 LIFTING and HOLDING

WARNING! WHEN TRANSFERRING THE STRUCTURAL LOAD TO THE UNDERPINNING PIERS, MONITOR THE FOOTING AND STRUCTURE CLOSELY FOR CRACKS AND FOR MOVEMENT IN ANY DIRECTION. WATCH ALL PIER ASSEMBLIES AND RAMS TO BE SURE THAT THEY STAY IN PROPER POSITION AND ALIGNMENT. BEWARE OF HIGH PRESSURE HYDRAULIC OIL, DO NOT USE DAMAGED OR LEAKING HOSES AND/OR HYDRAULIC EQUIPMENT.

CRUSHING HAZARD: DO NOT PLACE HANDS OR OTHER PARTS OF THE BODY INTO VOIDS UNDER THE FOUNDATION THAT WERE CREATED DURING LIFTING AND RESTORATION.

CAUTION! The maximum height of the stack of shims should not exceed 4" to ensure full pier system load transfer capacity as stated in this manual.

Remove any mortar and caulk used to fill gaps created as a result of foundation movement prior to attempting to lift the structure. Failure to permit clearance for masonry movement could result in limited restoration, broken windows and/or damage to the exterior of the structure.

The lifting and holding operation is designed to raise the structure and to restore it to as close to the original elevation as the construction will allow. Normally this lifting and holding operation is accomplished with several simultaneous pier placements. Install a 25 to 50 ton hydraulic ram as required between the two piece lift head assembly and the top pier platform on each pier. Install 3-1/2" square by 3/4" pier shims, or equivalent, to reduce excess space between the ram and the two piece lift head assembly. This increases the effective ram strokes. The rams shall be actuated simultaneously to raise the structure. Lifting shall continue until the structure is restored to its approximate original elevation or to design specifications. When restored, the lifting forces and amount of lift is documented.

Install the cadmium plated lift shims above the vertical stabilizer plates of the top pier platform. The maximum allowable height of shims that will maintain published ratings of the pier system is 4". The 7 gauge shims shall always be stacked to provide the required height. The 16 gauge shims are only used for fine adjustments between the stack of 7 gauge shims and the bottom of the pier pins or bolts. Install two high strength pier pins (3/4” dia Grade 8 Bolts AP-UF-4500.237[*] and AP-PP-4500.237[*]) into the holes in the pier bracket by tapping the high strength pier pins into place. There must be a snug fit of the high strength pier pins and the lift shims. The taper pins (3/4” dia Grade 8 bolts for AP-UF-4500.237[*] and AP-PP-4500.237[*]) shall be installed fully until the head contacts the bracket. The load shall then be transferred to the pier system by removing the pressure from the hydraulic rams. Remove the ram and then remove the 1" locking pins and the two piece lift head assembly from the pier bracket.

3.9 DOCUMENTATION

The installer shall carefully monitor the driving force applied to the pier sections as the pier is installed. It is recommended that the driving force be recorded at 3-1/2 foot intervals unless directed otherwise by the engineer. The form of the data may be as directed by the customer or the engineer.

The lifting force, lift, and pier depth shall also be recorded and presented in a tabular form. In addition, the installer shall know and have calculated the desired terminal pressure that will create the desired Proof Load Test force approved by the engineer prior to beginning the pier installation.

3.10 VOID FILLING (Optional – Depends upon soil characteristics, structure, and amount of lift)

CAUTION! **When filling a void under a slab on grade, it should be noted that the process introduces moisture under the slab that can cause upheaval several days after the injection work is complete. This is most likely to occur in areas with highly expansive soils and during dry periods of the year. The contractor should exercise extreme caution not to inject too much grout into void areas.**

A performance test of the plumbing system shall be performed before, during and after the void filling operation. This will prevent injected grout from damaging plumbing lines under the slab.

After raising operations are complete, voids created between the foundation and underlying soil shall be filled using a low pressure injection of grout slurry. Injection shall be through holes through the foundation. The contractor shall inject the grout in such a manner as to completely fill the void without trapping pockets of air. When the operation is complete, the contractor shall repair the injection holes by filling the holes with high strength non-shrinking grout and finishing to reasonably match the existing surface textures and elevations.

3.11 CLEAN UP

CAUTION! **Proper drainage is required! Any drainage correction and/or improvement should be in place concurrent with the foundation restoration. Failure to maintain proper drainage could lead to seasonal instability. Standing water adjacent to the structure may cause areas of upheaval.**

When all of the equipment has been removed, the area shall be backfilled using the previously excavated soil. The excavations shall be backfilled by placing no more than 8" of loose material in a lift and compacting that soil prior to placement of the next 8" lift. Sufficient lifts shall be used to restore the ground to its original elevation and density. Slope the soil contour around the perimeter of the structure for drainage away from the foundation. Dispose of all waste in a legal manner.

END OF SPECIFICATION

MODEL SPECIFICATION

ATLAS RESISTANCE® MODIFIED PIER SYSTEM with INTEGRATED CHANCE® HELICAL TIEBACK ANCHOR and REACTION PLATE

© 2006, Hubbell Incorporated
All Rights Reserved

THIS PAGE LEFT BLANK INTENTIONALLY

MODEL SPECIFICATION

Atlas Resistance® Modified Pier System with Integrated Chance® Helical Tieback Anchor and Reaction Plate

Atlas Resistance® Modified Piers

- **AP-2-UF-2875.165M**
- **AP-2-UFVL-3500.165M**
- **AP-2-UFVL-4000.219**

Chance® Helical Tiebacks

- **SS125 1-1/4" RCS**
- **SS1375 1-3/8" RCS**
- **SS5 and SS150 1-1/2" RCS**
- **SS175 1-3/4" RCS**

1 GENERAL

1.1 SCOPE of WORK

This work consists of furnishing all labor, tools, equipment and materials associated with the preparation and installation of the Atlas Resistance® 2-Piece Modified Pier System for structural foundation support and installation of the Chance® Helical Tieback System for lateral support of the proposed structure according to the specifications contained herein. The work includes, but is not limited to the following:

a. Diligent investigation of the possible existence and location of underground utilities situated at or near the area of work;

b. Excavation and preparation of foundation soil to grade for pier installation with an excavation of sufficient size and depth behind the proposed footing to permit installation of the Atlas Resistance® 2-Piece Modified Pier and insertion of the Chance® Helical Lead Section, and any extension sections;

c. Mounting of the hydraulic gear motor on a backhoe unit or similar auxiliary powered equipment and the installation of the tieback anchor to the required torque resistance and installation angle to achieve adequate soil cover. Removal of the hydraulic gear motor;

d. Installation of the 2-Piece pier bracket including concrete anchors, mounting of the drive stand assembly and the installation of steel pier sections, Proof load testing the pier to designed specifications and installation of sleeving over the pier pipe to required depth;

e. Transferring the structural load to the piers with hydraulic rams to the specified working load;

f. Connecting the tieback reaction plate to the Chance® Helical Tieback Anchor, securing the tieback reaction plate to the Atlas Resistance® 2-Piece Modified Pier Bracket, conducting optional Field Load tests on one or more Chance® Helical Tieback Anchors and loading said tiebacks to working load;

g. General site clean-up.

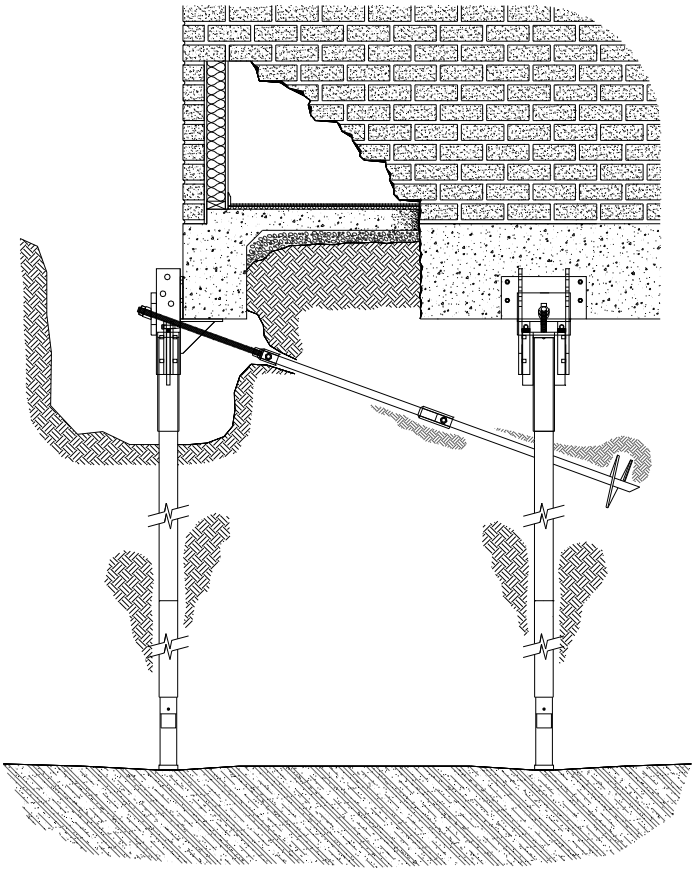

Typical Application Using Atlas Resistance® 2-Piece Modified Piers with Integrated Chance® Helical Tieback Anchors.

1.2 REFERENCES

a. CHANCE® Civil Construction Technical Design Manual, latest version; CHANCE® Civil Construction, Hubbell Power Systems, Inc., 2006.

b. Foundation Analysis and Design, Joseph E. Bowles, 4th Edition, McGraw Hill, 1988.

c. Foundation Engineering, G.A. Leonards, Editor, McGraw Hill, 1962.

d. American Society for Testing and Materials (ASTM) Standard Specifications, most recent versions.

(1) ASTM A29 - Standard Specification for Steel Bars, Carbon and Alloy, Hot Wrought and Cold Finished.

(2) ASTM A36 - Standard Specification for Carbon Structural Steel.

(3) ASTM A53 - Standard Specification for Welded and Seamless Steel Pipe.

(4) ASTM A153 - Zinc Coating (Hot Dip) on Iron and Steel Hardware.

(5) ASTM A193/A193M - Alloy-Steel and Stainless Steel Bolting Materials for High Temperature Service.

(6) ASTM A252 - Welded and Seamless Steel Pipe Piles.

(7) ASTM A325 - Standard Specification for Structural Bolts, Steel, Heated Treated, 120/105 ksi Minimum Tensile Strength.

(8) ASTM A500 - Standard Specification for Cold Formed Welded and Seamless Carbon Steel Structural Tubing in Rounds and Shapes.

(9) ASTM A513 - Standard Specification for Electric Resistance Welded Carbon and Alloy Steel Mechanical Tubing.

(10) ASTM A536 - Standard Specifications for Ductile Iron Castings.

(11) ASTM A572 - Standard Specification for High Strength Low Alloy Columbium-Vanadium Structural Steel.

(12) ASTM A615 - Standard Specification for All Thread Rebar, Grade 60.

(13) ASTM A656 - Hot-Rolled Structural Steel, High-Strength Alloy Plate with Improved Formability.

(14) ASTM A958 - Standard Specifications for Steel Casings, Carbon, and Alloy, with Tensile Requirements, Chemical Requirements Similar to Wrought Grades.

(15) ASTM A1018 - Steel, Sheet and Strip, Heavy Thickness Coils, Hot Rolled, Carbon, Structural, High-Strength Low-Alloy, Columbium or Vanadium, and High-Strength Low-Allow with Improved Formability.

e. Society of Automotive Engineers (SAE) specifications, most recent versions.

SAE J429 Mechanical and Material Requirements for Externally Threaded Fasteners.

1.3 DELIVERY, STORAGE and HANDLING

All CHANCE® Civil Construction products shall be handled and transported carefully to prevent any deformation or damage. Care should be taken to prevent the accumulation of dirt, mud or other foreign matter on the steel materials. Such accumulation shall be completely removed prior to installation.

2 RESISTANCE® PIER MATERIAL

2.1 PIER BRACKET

The pier bracket shall be a welded assembly of 5/8" and 1/2" thick cut steel plates conforming to ASTM A36, A568 and A569. The pier bracket shall provide a bearing surface against the bottom of the footing and the vertical face of the foundation. The pier bracket shall have an extended vertical leg that allows for securing the bracket to the footing through tabs on the sides of the pier bracket. The pier bracket shall have guides for installing the top pier platform.

2.2 ANCHOR BOLTS

Each under-footing pier bracket requires two 1/2" diameter by 5-1/2" long (minimum) steel concrete expansion bolts (four required for the 4-1/2" diameter heavy duty 2-piece pier), cadmium plated with an ultimate pullout capacity of 8,000 lbs in 3,000 psi concrete. Minimum embedment shall be 3-1/2". The anchor bolts shall be supplied with a flat washer and nut. The drive stand requires two (minimum) 1/2" diameter by 5-1/2" long (minimum) steel concrete expansion bolts (Hilti Kwik Bolt II Expansion Anchors or equivalent) for temporary mounting during pier installation. Bolts are required for mounting only.

2.3 GROUT (Optional for Pier Bracket Mounting)

2.3.1 PRESSURE BEARING GROUT

Quick setting premixed mortar with a 4,500 psi (minimum), three day strength (Master Builder's 713 Non-Shrink Grout or equivalent).

2.3.2 FLOWABLE GROUT (Optional)

Quick setting, neat cement flowable grout with a 4,000 psi (minimum) three day strength.

2.4 DRIVE STAND ASSEMBLY

The drive stand assembly is a welded steel frame with a double acting hydraulic actuator capable of pressing the 42" long steel pier sections through the soil to a load bearing strata and sleeving to the design depth. The drive stand assembly is temporarily attached to the pier bracket by means of 1" diameter by 2-3/4" long high strength locking pins and is mounted to the structure with at least two 1/2" diameter by 5-1/2" long (minimum) steel concrete expansion bolts.

2.5 PIER SECTION

2.5.1 AP2-2875.165 Series Pier Section

Each pier section shall be fabricated from a 2-7/8" outside diameter by 42" long mill rolled, induction heat treated steel section with a 0.165" wall thickness. The initial section shall have a 3-1/2" outside diameter collar welded to the lead end of the pipe to assist in reducing wall friction during driving of the pier to capacity. The pier sections that follow shall each have a coupling attached to one end and no outside collar. Steel in this section shall conform to ASTM A500 Grade B.

2.5.2 AP2-3500.165 Series Pier Section

Each pier section shall be fabricated from a 3-1/2" outside diameter by 42" long mill rolled galvanized steel section with a 0.165" wall thickness. A triple coat corrosion protection of zinc chromate and clear polymer coating shall be provided. The initial section shall have a 4" outside diameter collar welded to the lead end of the pipe to assist in reducing wall friction during driving of the pier to capacity. The pier sections that follow shall each have a coupling attached to one end and no outside collar. Steel in this section shall conform to ASTM A500 Grade B.

2.5.3 AP2-4000.219 Series Pier Section

Each pier section shall be fabricated from a 4" outside diameter by 42" long mill rolled steel section with a 0.219" wall thickness. The initial section shall have a 4-1/2" outside diameter collar welded to the lead end of the pipe to assist in reducing wall friction during driving of the pier to capacity. The pier sections that follow shall each have a coupling attached to one end and no outside collar. Steel in this section shall conform to ASTM A500 Grade B.

2.6 PIER COUPLING

The pier coupling shall be a 6" long tubular steel section of suitable diameter to fit inside the pier section. The coupling is mechanically attached 3" inside one end of each pier section that follows the initial pier section. The remaining 3" of the coupling extends beyond the pier section. All components conform to ASTM A513 or ASTM A500 Grade B.

2.7 MODIFIED PIER SLEEVE

The sleeve is used to stiffen the segmented joints of the pier pipe. The modified sleeve pier section shall be fabricated from a 42" long mill rolled tubing, 3-1/2" diameter, 0.216" wall; 4" diameter, 0.219" wall; or 4-1/2" diameter, 0.237" wall thickness. The yield strength is 50,000 psi. The length of the modified pier sleeve that mounts last on top of the pier pipe shall have an internal ring welded to one end. This ring provides load transfer from the structure to the pier pipe. The sleeving is supplied one nominal diameter size greater than the pier pipe. The sleeving shall be installed in a manner that staggers the joints in the pier with the joints in the sleeving. Steel in this section shall conform to one or more of ASTM A53 or ASTM A500 Grade B.

2.8 TOP PIER PLATFORM

The standard pier platform is a welded assembly consisting of an 18" long steel tube of suitable size to fit over the pier section that will form the cap cylinder. The cap cylinder shall have two 10" long by 5/8" thick steel plates welded as vertical stabilizers to the sides of the steel cap cylinder. The top of the top pier platform shall be a 1" thick steel plate welded to the top of the cap cylinder. All steel elements conform to ASTM A36, ASTM A500 Grade B and/or A53.

2.9 HIGH STRENGTH PIER PINS

Two 5/8" diameter by 3" long high strength, heat treated cadmium plated pier pins conforming to ASTM A29 Grade 10B21 are required per pier. The pins shall be quenched and tempered to HRC 36± and capable of providing 55,000 lbs of ultimate shear resistance capacity in double shear configuration.

2.11 LIFT SHIMS

The lift shims shall be 7 gauge, 5/8" by 1-1/2" long cadmium plated hot rolled steel. Lift shims are used as required up to a maximum height of 4". Final adjustments shall be made with one or two 16 gauge, 5/8" by 1-1/2" long cadmium plated hot rolled steel shims. The steel shall conform to ASTM A36.

2.12 WELDMENTS

All welded connections shall conform to the requirements of the American Welding Society specification "Structural Welding Code AWS D1.1," and applicable revisions.

3 HELICAL TIEBACK MATERIAL

3.1 HYDRAULIC GEAR MOTOR

Hydraulic gear motors used to install Chance® Helical Tieback Anchors to the desired torque are generally rated between 4,500 to 12,000 ft-lb. Depending upon the soil conditions and pile configuration, different hydraulic gear motors may be used. The installation torque rating of the hydraulic gear motor shall be at least 25% higher than the planned installation torque.

3.2 HELICAL TIEBACK ANCHOR for LATERAL SUPPORT

3.2.1 Lead Section

The lead section consists of a round cornered square hot rolled steel lead section conforming to ASTM A29. The shaft may be specified in sizes from 1-1/4" to 1-3/4" square, and the length of the lead section is specified from 10" long to 10 feet long as required by the application. One end of the lead section shall have a beveled pilot point to aid in starting the anchor. The other end shall have one hole to receive an integrally forged coupling or cast sleeve, depending on the shaft size. Welded to the lead section shall be one or more Grade 50 or Grade 80 hot rolled steel helical plates with a thickness of 3/8" or 1/2" and a 3" pitch. Helical plate diameters may be specified in any combination of equal or increasing diameters from 6" to 16".

3.2.2 Extension Section

A standard extension section shall be an assembly consisting of a round cornered square hot rolled steel section conforming to ASTM A29, an integrally forged coupling or a cast steel sleeve and mounting hardware. The shaft shall be a specified size from 1-1/4" to 1-3/4" square, and the length of the extension section specified from 36" long to 10 feet long as required by the application. One end (integrally forged couplings) or each end (cast sleeve) of the shaft shall have one hole to receive coupling attachment bolts depending on the shaft size.

In higher load capacity projects or in very weak soil conditions, the standard extension section may have one or more Grade 50 and 80 hot rolled steel helical plates with the thickness specified as either 3/8" or 1/2" and a pitch of 3" welded to the shaft. Helical plate diameters may be specified in any combination of equal or increasing diameters from the largest helical plate on the lead section up to 16".

For Type SS5, SS150 and SS175 material, the coupling shall be formed as an integral part of the plain and helical extension material as hot upset forged sockets. For Type SS125 and SS1375 material, the coupling shall be a cast steel sleeve conforming to ASTM A958 Grade 90/60, with two holes for connecting shaft sections together. The sections are attached with structural grade bolts.

3.2.3 Transition

Helical tieback anchor thread bar shall be either a threaded stud adapter, or a combination of pre-stressed steel tendon and ductile iron or forged steel adapter, both of which are attached to the previously installed central steel shaft via an integrally forged socket or cast steel socket and coupling bolt. Tendon shall be a continuous thread steel bar of specified diameter and length depending on the application and load per ASTM A615 (Dywidag bar or Williams All-Thread Rebar).

3.2.4 Continuous Threaded Rebar

A continuous threaded rebar provides the attachment between the helical anchor and the tieback reaction plate. The continuous threaded rebar shall be a threaded steel bar of specified diameter and length depending on the application and loading. Each continuous threaded rebar shall be supplied with a hex nut and bevel washer for attachment. Conforms to ASTM A615, Grade 75.

3.2.5 Bevel Washer

A bevel washer shall be installed between the plate washer and the nut on the continuously threaded rebar. The bevel washer helps to transfer the load between the vertical tieback reaction plate and angle of the anchor. The standard 15º bevel washer shall be 2" square steel, hot dip galvanized, with a 1-1/8" diameter mounting hole in the center to accept threaded bar.

3.2.6 Tieback Reaction Plate

A tieback reaction plate is installed between the pier bracket and the nut and bevel washer on the end of the threaded bar. The tieback reaction plate shall be fabricated of 3/4" thick steel plate conforming to ASTM A572, with a mounting hole in the center to accept the threaded bar.

4 EXECUTION

The following is intended to provide the controlling specification for the major steps undertaken in the installation of the Atlas Resistance® Pier System with Tieback Anchor for lateral support.

WARNING! THOROUGHLY INVESTIGATE THE LOCATION OF ALL UNDERGROUND UTILITIES SITUATED AT OR NEAR THE AREA OF WORK BEFORE PROCEEDING. SERIOUS INJURY MAY RESULT FROM FAILURE TO LOCATE AND AVOID CONTACT WITH UNDERGROUND UTILITIES.

4.1 EXPOSURE of FOOTING or GRADE BEAM

An area shall be excavated immediately adjacent to the building foundation to expose the footing, bottom of the grade beam, stem wall or column to a width of at least 30". The excavation shall continue at least 15" vertically beneath the bottom of the concrete and 12" under the stem wall at proposed location of the pier bracket. A chipping hammer shall be used to smooth and prepare the foundation for later mounting of the pier bracket. The vertical and bottom face of the footing, if applicable, shall, to the extent possible, be smooth and at right angles to each other. The spread footing, if present, shall be notched to allow the AP-2 Series Pier Bracket to mount directly under the bearing load of the stem wall unless directed otherwise by the engineer. DO NOT cut any reinforcing steel in the footing element without approval by the engineer. The surfaces shall be smooth, free of all dirt, debris, and loose concrete so as to provide firm bearing surfaces for the pier bracket.

CAUTION! Carefully space the placements along the footing so that the structure is not over-spanned. Excessive pier spacing can cause damage to the concrete footing, stem wall and/or slab from structural overload. Ensure that the necessary existing structural considerations have been addressed before attempting to lift or stabilize a structure.

4.2 INSTALLATION of the TIEBACK ANCHOR

The hydraulic gear motor shall be installed on a backhoe or other suitable pier installation unit. The lead section is positioned in the excavation with the smallest helical plate nearest the soil. The opposite end is attached to the hydraulic gear motor drive head with the appropriate drive tools, bent arm pin(s) and retaining clip(s). The lead section is usually aligned perpendicular to the plane of the footing and installed at the specified angle down from horizontal, normally 5º to 20º. The engineer shall specify installation angles.

WARNING! UNDER NO CIRCUMSTANCES SHOULD THESE PRODUCTS AND EQUIPMENT BE USED WITHOUT PROPER TRAINING IN PROCEDURE AND KNOWLEDGE OF PRODUCT CAPACITIES. THE USE AND OPERATION OF HYDRAULIC GEAR MOTORS CAN BE EXTREMELY HAZARDOUS WITHOUT PROPER TRAINING OF FIELD PERSONNEL. THE TORSIONAL FORCES DEVELOPED DURING INSTALLATION CAN BE EXTREME, RESULTING IN POSSIBLE BREAKAGE OF MATERIALS AND EQUIPMENT. RAPID TRANSFER OF THESE FORCES TO REACTION ASSEMBLIES CAN OCCUR, LEAVING NO TIME FOR PERSONNEL TO AVOID CONTACT. SERIOUS BODILY INJURY, PROPERTY DAMAGE AND POTENTIALLY LIFE THREATENING SITUATIONS CAN ARISE FROM IMPROPER USE OF EQUIPMENT AND MATERIALS USED IN THE INSTALLATION OF THESE PRODUCTS.

IF A REACTION BAR IS USED, IT MUST BE MECHANICALLY FASTENED TO A SUITABLE RESTRAINT AGAINST ROTATIONAL MOVEMENTS IN BOTH DIRECTIONS. SERIOUS INJURY AND PROPERTY DAMAGE MAY OCCUR IF AN UNMOVABLE OBJECT DOES NOT PROPERLY RESTRAIN THE REACTION BAR IN ALL DIRECTIONS.

WARNING! DO NOT STAND ON THE REACTION BAR OR USE ANY BODY PARTS TO ATTEMPT TO RESTRAIN THE REACTION BAR. SERIOUS INJURY AND PROPERTY DAMAGE MAY OCCUR IF THE REACTION BAR IS NOT PROPERLY ATTACHED TO THE STRUCTURE OR OTHERWISE RESTRAINED BY A SUITABLE UNMOVABLE OBJECT.

Additional extension sections are then installed as required until the specified design installation torque or adequate tieback resistance is achieved at the desired depth. Driving shall cease when the final design torque is obtained through the specified distance. The anchor shall be driven at the design torque until the driven end of the anchor is at the proper design location to attach to the tieback reaction plate. In dense soils, a long extension section may have to be removed and a shorter one installed to achieve the proper final location. The hydraulic gear motor assembly is removed after termination criteria is achieved. The installer must be mindful that the shaft of the tieback must be positioned to later connect to the underpinning pier bracket.

4.3 DOCUMENTATION

The installer shall carefully monitor the torque applied to the helical tieback anchor as it is installed. It is recommended that the installation torque be recorded at one foot intervals. In no case should the measurements exceed every two feet unless directed otherwise by the engineer. Torque may be monitored with in-line torque monitoring equipment, or with a hydraulic pressure gage that has been calibrated to the torque motor, or with equipment that measures the differential pressure across the torque motor. If using hydraulic pressure to measure torque, the installer shall provide calibration data relating hydraulic pressure to torque for the selected torque motor. At the specified intervals, the installer shall record the torque in the installation log for each helical anchor.

At the conclusion of the installation, the raw field data shall be converted to a Tieback Anchor Installation Summary. A copy of the raw field data and the Tieback Anchor Installation Summary shall be provided to the engineer for review.

4.4 INSTALLATION of the PIER BRACKET

The pier bracket shall be temporarily mounted to the drive stand assembly using 1" diameter pins and retaining clips. The assembly is lowered into the excavation adjacent to the foundation. The pier bracket shall then be positioned and seated flush against the face and bottom of the footing using a hydraulic actuator or ram. The pier bracket is then fastened to the footing with two expansion anchor bolts. If the pier bracket does not have continuous bearing support on either the vertical or horizontal face, then pressure bearing grout shall be used to provide proper bearing prior to driving the pier. Care should be exercised to ensure that the drive stand assembly frame is aligned plumb prior to driving each pier section. A carpenter's level may be used to verify the vertical alignment in both plains. The bubble shall be between the lines on the vial. It is acceptable for the bubble to touch a line.

WARNING! INCORRECT PREPARATION OF THE FOOTING MAY ALLOW THE PIER BRACKET TO ROTATE AND SHEAR THE MOUNTING BOLTS. ROTATION OF THE PIER BRACKET CAN DAMAGE THE FOOTING, PIER, AND INSTALLATION EQUIPMENT. IN ADDITION, SERIOUS INJURY MAY OCCUR FROM FALLING EQUIPMENT DURING PIER INSTALLATION FROM BROKEN BOLTS.

Install a lateral support device between the bottom front side of the pier bracket and the vertical wall of the excavation opposite the pier. During installation of the pier sections, maintain support against the pier bracket with the lateral support device.

4.5 DRIVING and TESTING PIER SECTIONS

WARNING! THE DRIVE STAND AND DRIVE CYLINDER ARE VERY HEAVY. USE PROPER LIFTING AND HANDLING TECHNIQUES. STAY CONSTANTLY AWARE OF THE DRIVE CYLINDER'S POSITION IN THE DRIVE STAND AND THE ALIGNMENT OF THE PIER SYSTEM COMPONENTS. DO NOT LET THE CYLINDER WORK ITS WAY OUT OF POSITION. MONITOR THE FOOTING AND STRUCTURE CLOSELY FOR CRACKS. DO NOT EXCEED THE HYDRAULIC CYLINDER MANUFACTURER'S WORKING PRESSURE WHEN DRIVING THE PIER SECTIONS. BEWARE OF HOT, HIGH-PRESSURE HYDRAULIC OIL. SERIOUS INJURY MAY RESULT FROM NOT FOLLOWING PROPER SAFETY TECHNIQUES.

CAUTION! CHECK TIGHTNESS OF PIER BRACKET MOUNTING BOLTS OFTEN DURING PIER SECTION AND SLEEVE INSTALLATION. SERIOUS INJURY MAY RESULT FROM LOOSE BOLTS.

4.5.1 Driving of Pier Sections

All pier sections shall be continuously driven by use of the drive stand and hydraulic cylinder assembly. The initial pier section shall have the friction reduction collar on the bottom end. Additional pier sections shall be added as the pier driving operation continues. Driving of the pier sections will continue until rock or a suitable bearing stratum is reached as defined by a force equal to 1.65 times the working load specified by the engineer or until lift of the structure is achieved, whichever is less

WARNING! **CHECK TIGHTNESS OF PIER BRACKET MOUNTING BOLTS OFTEN DURING PIER SECTION AND SLEEVE INSTALLATION. SERIOUS INJURY MAY RESULT FROM LOOSE BOLTS.**

CAUTION! **DO NOT EXCEED THE HYDRAULIC CYLINDER MANUFACTURER'S WORKING PRESSURE WHEN DRIVING THE PIER SECTIONS, ESPECIALLY WITH THE RAM FULLY EXTENDED. SERIOUS INJURY MAY RESULT.**

If the maximum hydraulic cylinder operating pressure is reached prior to bearing stratum verification, remove the double acting hydraulic actuator from the drive stand assembly and replace it with a 2" x 4" x 7-1/8" supplemental block. Install a 25 or 50 ton hydraulic ram (depending upon Proof Load force required) between the last pier section and the supplemental block. The hydraulic ram shall be actuated with a hand pump until bearing strata is verified as defined by a maximum installation force of 1.65 times the designed working load.

The installation force shall not exceed:

AP-2-UF-2875.165M (Modified 2-7/8" Dia Pier System)	= 57,750 lbs
AP-2-UFVL-3500.165M (Modified 3-1/2" Dia Pier Systems)	= 75,075 lbs
AP-2-UFVL-4000.219 (4" Dia Pier Systems)	= 90,750 lbs

or until lift of the structure is achieved, whichever is less.

4.5.2 Proof Load Testing (Optional)

To accomplish field load testing of the Atlas Resistance® Pier, CHANCE® Civil Construction recommends a bearing capacity confirmation of 1.5 times the designed working load. This operation verifies a Factor of Safety of 1.5:1 on the field installation.

Proof Loading the pier may be accomplished by either installing a 2" x 4" x 7-1/8" supplemental block in place of the hydraulic drive cylinder on the drive stand or by mounting a lift head on the pier bracket of existing work. Install a 25 or 50 ton hydraulic ram (depending upon Proof Load force required) between the pier and the supplemental block or lift head. The hydraulic ram shall be actuated with a hand pump until bearing strata is verified as defined by a maximum installation force of 1.5 times the designed working load not to exceed 1.5 times the maximum published working capacity.

Do not exceed these maximum Proof Loads:

AP-2-UF-2875.165M (Modified 2-7/8" Dia Pier System)	= 52,500 lbs
AP-2-UFVL-3500.165M (Modified 3-1/2" Dia Pier Systems)	= 68,250 lbs
AP-2-UFVL-4000.219 (4" Dia Pier Systems)	= 82,500 lbs

or until lift of the structure is achieved, whichever is less.

4.5.3 Cutting Final Pier Section

It is likely that the final installed pier section will have to be cut to a length suitable to provide space for installing the top pier platform. Mark the last section of pier pipe at the proper elevation, remove the pier section from the hole and cut the pier section to the proper length using a metal cutting saw capable of a smooth cut at 90° to the length of the pier section. After cutting to length, the final pier section is replaced and the top of pier elevation checked.

4.5.4 Modified Pier Sleeve

The modified pier sleeve is used to stiffen the pier pipe near the pier bracket. The modified pier sleeve that mounts on top of the pier pipe shall have an internal ring welded to one end. This ring provides load transfer from the structure to the pier pipe. The sleeve supplied with the modified pier system consists of one sleeve pipe with a nominal diameter size greater than the pier pipe. Once the capacity of the pier is achieved and the pier pipe cut to final length, the drive stand assembly is used to push the pipe sleeve over the last pier section or sections. **DO NOT exceed the manufacturer's rated operating capacity for the hydraulic cylinder.**

4.5.5 Drive Equipment Removal

The hydraulic drive cylinder is removed from the drive stand assembly. The drive stand assembly is then removed from the pier bracket by removing the locking pins at the pier bracket and by removing the nuts securing the drive stand assembly to the stem wall. After removing the drive stand assembly, cut off or drive the anchor bolts into the wall.

4.6 INSTALLING FLOWABLE GROUT (Optional)

The engineer may require additional stiffness of the pier pipe. Usually, specifications for grouting the pier include the installation of a #4 steel reinforcing bar prior to introducing the grout. When the pier is installed to load bearing stratum and cut to the proper elevation, a neat cement flowable grout may be installed into the pier pipe. The grout will increase the moment of inertia (stiffness) and corrosion resistance of the pier. The grout shall be introduced to the bottom of the pier by means of a tremie tube inserted into the pier pipe. As the grout is pumped into the pier pipe the tube shall be removed as the elevation of the grout increases. The process shall be executed carefully so that air is not retained into the grout.

4.7 INSTALLATION of the TOP PIER PLATFORM

The top pier platform shall be installed over the last installed pier section and modified pier sleeve. Align the vertical stabilizers within the channels on the legs of the pier bracket and tap the top pier platform until it contacts the top of the final modified sleeve section. A small port is provided between the cap cylinder and the platform to verify contact.

4.8 LOAD TRANSFER

The load transfer operation is designed to transfer the structural support from the soil to the underpinning pier. Install the 55-ton hydraulic ram as required between the pier lift head assembly and the top pier platform of the pier. Apply the specified design load to the pier by pressurizing the hydraulic ram. Install the cadmium plated lift shims above the vertical stabilizer plates of the top pier platform. (**Note**: The 7 gauge shims shall be used for filling the space. The 16 gauge shims are only used for fine adjustments between the stack of shims and the bottom of the pier pin holes in the pier bracket.) Install two high strength pier pins into the holes in the pier bracket by tapping the high strength pier pins into place. There must be a snug fit of the high strength pier pins and the lift shims. The design load is then transferred to the Atlas Resistance® Pier system by removing the pressure from the hydraulic ram. Remove the ram along with the lift head assembly from the pier bracket.

4.9 DOCUMENTATION

The installer shall carefully monitor the driving force applied to the pier sections as the pier is installed. It is recommended that the driving force be recorded at 3-1/2 foot intervals unless directed otherwise by the engineer. The form of the data may be as directed by the customer or the engineer.

The lifting force, lift and pier depth shall also be recorded and presented in a tabular form. In addition, the installer shall be provided with the working load and the desired Factor of Safety approved by the engineer prior to beginning the pier installation.

4.10 LOADING the TIEBACK ANCHOR

The transition is bolted to the final tieback extension section using the hardware supplied with the transition. Then a length of continuously threaded bar is attached to the transition and extended between the vertical legs of the pier bracket and above the top pier platform. The tieback reaction plate, bevel washer and hex lag nut are installed on to the threaded bar. Normally, the longest side of the tieback reaction plate is positioned in the horizontal direction and transfers force to the vertical legs of the 2-piece Atlas Resistance® Pier bracket.

4.1.1 Hydraulically Loading the Tieback Anchor

A twin cylinder hydraulic ram or hollow-ram hydraulic cylinder and a field fabricated loading frame are positioned over the threaded bar, secured with an additional hex lag nut and connected to the pump. The hydraulic ram may bear against the tieback reaction plate. The hydraulic system is activated causing a lateral force against the pier bracket. The supervising engineer shall determine the preload force. Care should be exercised by accomplishing the loading at a slow pace while visually monitoring the pier bracket and foundation for any evidence of new structural distress.

WARNING! DO NOT ALLOW ANYONE TO STAND IN THE AREA BEHIND THE THREADED BAR AND JACK DURING LOADING. <u>SERIOUS INJURY MAY OCCUR IF A COMPONENT SHOULD FAIL DURING OPERATION</u>.

The tieback may be load tested for anchoring (tension) capacity. It is recommended that a Factor of Safety above the design load be achieved. Refer to *Appendix B* in the CHANCE® Civil Construction Technical Design Manual, Latest Edition, for details on performing a load test on tieback anchors.

LOAD TESTING SHOULD BE CONDUCTED UNDER THE SUPERVISION OF THE RESPONSIBLE ENGINEER

The final step in the installation of the tieback anchor is to lock the tieback reaction plate against the 2-piece Atlas Resistance® Pier bracket using the bevel washer and hex nut. Check the nut for snugness before releasing hydraulic pressure on the hydraulic ram. Remove the hydraulic ram. Cut and remove any excessive length of threaded bar.

4.1.2 Mechanically Loading the Tieback Anchor (Alternate Procedure)

The tieback anchor may also be loaded using a torque wrench. This method does not provide the accurate anchor load data obtained in section 4.1.1. In addition, the maximum load that can practically be applied is in the range of 10,000 to 12,000 pounds.

The nut on the threaded bar is actuated with a torque wrench to apply the desired force on the tieback anchor. A Torque vs Load graph is presented in the CHANCE® Civil Construction Technical Design Manual as a guide for estimating the force applied to the pier bracket based upon the torque measured at the nut. After the tieback anchor is loaded as specified by the engineer, cut and remove any excessive length of threaded bar.

4.11 CLEAN UP

When the installation is complete, tested, loaded and locked in place all equipment shall to be removed from the site. All debris shall be removed and disposed of in a legal manner.

END OF SPECIFICATION

www.chancefoundationsolutions.com
civilconstruction@hubbell.com

PRODUCT SPECIFICATIONS

Chance® Instant Foundation® products

- 3-½" Dia x 0.300" Wall
- 4" Dia x 0.226" Wall
- 6-5⁄8" Dia x 0.280 Wall
- 8-5⁄8" Dia x 0.250" Wall
- 10-3⁄4" Dia x 0.250" Wall

The usual application for this foundation is where loads are moderate and the project requires greater column stiffness than is possible with the typical square shaft helical pile. Examples of applications are: Light Standards, Curbside Business Sign Support, electrical/Mechanical equipment Pad Support, Cantilevered Loads, etc.

PART 1 – GENERAL

1.1 Scope of Work

This work consists of furnishing labor, tools, equipment and materials associated with the preparation and installation of the Chance® Instant Foundations for structural foundation support according to the specifications contained herein. The work includes, but is not limited to, the following:

1. Diligent investigation of the possible existence and location of underground utilities situated at or near the area of work;
2. Excavation and preparation of foundation soil to grade for foundation installation;
3. Mounting of the hydraulic gear motor on a backhoe unit or similar auxiliary powered equipment, and the installation of the Instant Foundations product to the required torque resistance at the required depth (if torque resistance measurement is required).
4. Removal of the hydraulic gear motor.
5. Conducting an optional Field Load Test on one or more Instant Foundations products.
6. Clean Up.

1.2 References

1. Building Officials and Code administrators International, Inc. (BOCA) Basic National Building Code.
2. American Association of State Highway and Transportation Officials (AASHTO) Standard Specifications for Structural Supports for Highway Signs, Luminaires and Traffic Signals.

1.3 Delivery, Storage and Handling

All foundation products shall be handled and transported carefully to prevent any deformation or damage. Care should be taken to prevent the accumulation of dirt, mud or other foreign matter on the steel materials. Such accumulation shall be completely removed prior to installation.

PART 2 - MATERIAL

2.1 Hydraulic Gear Motor

The torque rating of the hydraulic gear motor used to install the Instant Foundations product shall be adequate to install the required foundation. It is suggested that the torque rating be 25 percent higher than the planned installation torque. Depending upon the soil conditions and pile configuration, different hydraulic gear motors may be required.

2.2 3-1/2” and 4” Diameter Helical Instant Foundations Series

2.2.1 Foundation Shaft Section

The shaft section consists of a tubular hot rolled steel pile section 3-1/2” in diameter with a 0.300” wall thickness, or 4” diameter with a wall thickness of 0.226” conforming to ASTM A-53, A-252 and A-500. The length of the foundation shall be as specified: 4’, 4’-8”, 5’, etc. The lead end of the 3.5” and 4” foundations shall have a single or double bevel cut to aid in starting the foundation installation. Welded to the shaft shall be one ASTM A-635 steel helical plate with a thickness of 3/8” and a 3” pitch.

2.2.2 Foundation System Base Mounting Plates

Foundation base plates may be round or square, of various sizes in plan view and may vary in thickness from 1/2” to 1-1/2” depending on job requirements.

2.3 6-5/8”, 8-5/8” and 10-3/4” Diameter Helical Instant Foundations Series

2.3.1 Foundation Shaft Section

The shaft section consists of 6” diameter (6-5/8” outside diameter with 0.280” wall), 8” diameter

(8-5/8” outside diameter with 0.250” wall) or 10” (10-3/4” outside diameter with 0.250” wall) steel pipe conforming to ASTM A-53, A-252 or A-500. The length of the foundation may be 4’, 5’, 7’, 8’ or 10’ long as required by the application. The pile section shall have two wire access slots located 180° from each other. The integral foundation cap plate shall have an alignment notch located

Directly above one of the wire access slots. Welded to the lead end of the foundation shaft shall be a steel helical plate with a 3” pitch. To aid in starting the

pile, a 1-1/4” diameter steel rod shall extend beyond the center of the helix to provide a pilot.

2.3.2 Foundation System Base Mounting Plates

Foundation base plates may be round or square, of various sizes in plan view and may vary in thickness from 3/4” to 1-1/2” depending on job requirements.

2.4 Weldments

All welded connections shall conform to the requirements of the American Welding Society Structural Welding Code, AWS D1.1 and applicable revisions.

PART 3 - EXECUTION

The following is intended to provide the controlling specification for the major steps undertaken in the installation of the Chance® Instant Foundation systems. Variations in the installation procedure may occur depending on the application and the structural support required.

WARNING! THOROUGHLY INVESTIGATE THE POSSIBLE EXISTENCE AND LOCATION OF ALL UNDERGROUND UTILITIES SITUATED AT OR NEAR THE AREA OF WORK BEFORE PROCEEDING. SERIOUS INJURY MAY RESULT FROM FAILURE TO LOCATE ALL UNDERGROUND UTILITIES.

3.1 Preparation

The soil shall be excavated to the proper grade for placement of the Chance® Instant Foundations product. Stakes should be set at each foundation location prior to commencement of work. The foundation layout and staking should be under the supervision of the responsible structural engineer and be accomplished using fully qualified and trained technicians familiar with foundation layout.

3.2 Installation of The Instant Foundations Product

The hydraulic gear motor shall be installed on a backhoe or other suitable pile installation unit. Mount the Instant Foundations Product to the hydraulic gear motor via the appropriate Kelly bar adapter and installing tool using two structural grade bolts and nuts. The foundation is positioned vertically over a marked pile location and driven into the soil by means of the hydraulic gear motor. Rotary installation continues until the required design torque is achieved at or below the predetermined depth. The baseplate is typically installed to grade or slightly above to allow clearance for bolt mounting of the pole base. It is important that the installation torque remain at or above the predetermined value during this process. Details of the installation shall be provided to the supervising engineer for review.

3.3 Documentation

When required, the dealer/installing contractor shall monitor the torque applied to the foundation during installation. It is suggested, but not mandatory that the installation torque be recorded at one-foot intervals throughout the installation. The installation torque may be measured with a calibrated torque indicator. At the conclusion of the installation, a copy of the foundation installation record shall be provided to the engineer for review.

3.4 Load Test (Optional)

A detailed description on the requirements and procedures for conducting a Load Test may be found in Appendix B (Load Tests). The results of the Field Load Test provide guidance for determining the ultimate and allowable foundation loads.

Load testing should be conducted under the supervision of the responsible engineer.

Depending on the project specifications, a Working Load Test may be required. Normally, the first installed foundation is selected for this test; however, some specifications require ultimate loading of the foundation. If an Ultimate Load Test is required, a test foundation must be installed in an alternate location on the site in addition to the pile locations marked. After the Ultimate Load Test is completed, the test foundation may be removed from the soil and used on the project, provided it is not damaged.

3.5 Clean Up

Upon completion of the installation of the Chance® Instant Foundations product, all equipment shall be removed from the site. Any disturbed soils in the area of the foundation shall be restored to the dimensions and condition specified by the engineer.

END OF SPECIFICATION

Guide To Model Specification:
Hubbell Power Systems, Inc.

CHANCE® TYPE SQUARE SHAFT SCREW GUY ANCHORS

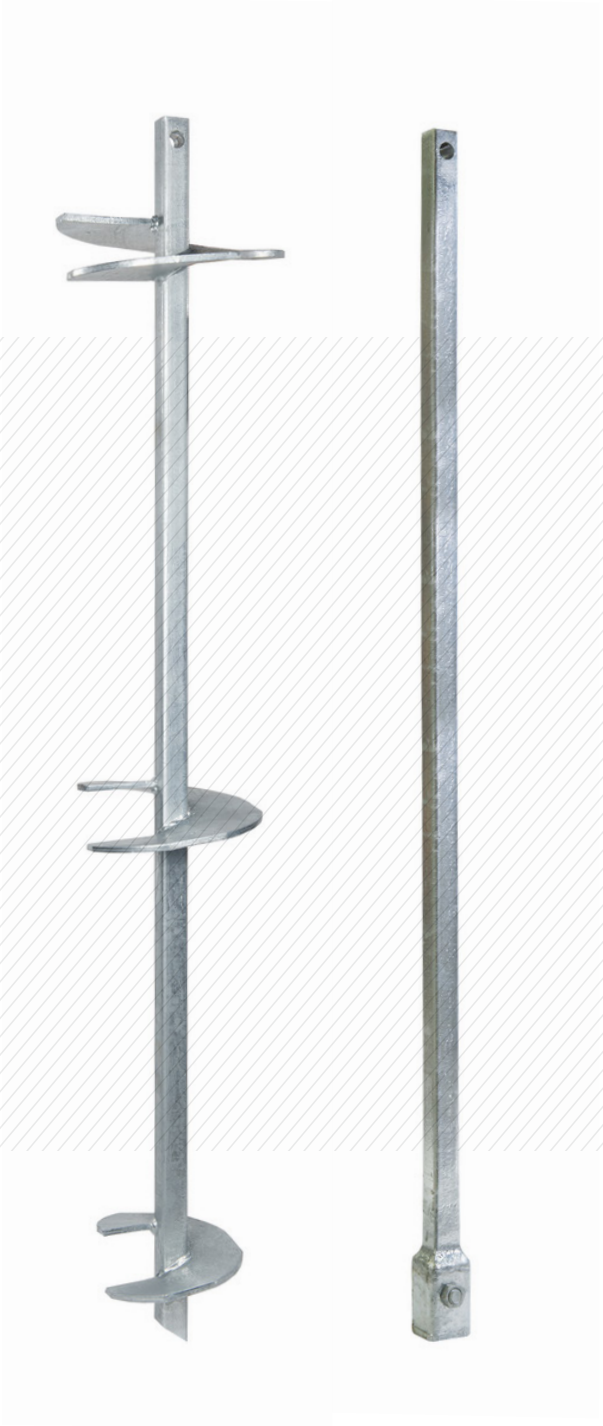

1. GENERAL

1.1 Purpose of Specification

The purpose of this specification is to detail the furnishing of all materials, tools, equipment, supervision, and installation techniques necessary to install Hubbell Power Systems, Inc. CHANCE® Type SS screw anchors for transmission and distribution structure guys as detailed on the drawings, including guy connection details. This shall also include provisions for load testing that may be part of the scope of work.

Items in Italics as such may be considered as "Commentary" and as such may be deleted or retained to suit the needs of the specification writer.

Specifier Note: This specification may require modification to account for unusual and/or unforeseen site and subsurface conditions and the particular circumstances of the project.

1.2 Scope of Work

This work consists of furnishing all necessary supervision, tools, materials, and equipment to perform all work necessary to install Type SS screw anchors for guys, at **(location, City, State)** for **(Company, State or Private Authority)** per the specifications described herein, and as shown on the drawings. The Contractor shall install Type SS guy anchors that will develop the load capacities as detailed on the drawings. This may also include provisions for load testing to verify anchor capacity and deflection, if part of the scope of work.

1.3 Qualifications of the Line Construction Contractor

The Line Construction Contractor shall be experienced in installing Type SS guy anchors and shall furnish all materials, labor, and supervision to perform the work. The Contractor shall provide resumes of key personnel who will be present on-site materially involved with the work. At a minimum, these personnel shall include foreman, machine operator, and ground-man.

The Line Construction Contractor shall not sublet the whole or any part of the contract without the express written permission of the Owner.

1.4 Related Project Specifications

To be determined by the specification writer.

1.5 Definitions

A partial list follows. ***The Owner may wish to add other specific, project-related items.***

Alignment Load (AL): A nominal load applied to an anchor during testing to keep the testing equipment correctly positioned and remove any slack in the reaction system.

Anchor:A foundation element used to attach or support an uplift load at the surface of the earth.

Bearing Stratum: Soil layer(s) of sufficient strength capable of resisting the applied axial load transferred by the screw anchor.

Contractor: The person/firm responsible for performing the line construction work.

Coupling: Steel shaft connection means formed as integral part of the plain extension shaft material. For SS anchors, couplings shall be hot upset forged sockets.

Creep: The movement that occurs during the creep test of an anchor under a constant load.

Design Load (DL): Maximum anticipated service load applied to the anchor. Also known as the working load (WL).

Eye: Termination above ground used to attach guy strand to anchor.

Helical Extension: Screw anchor component installed immediately following the lead section, if required. This component consists of one or more helix plates welded to a central steel shaft.
Helix Plate: Generally round steel plate formed into a ramped spiral. The helical shape provides the means to install the screw anchor, plus the plate transfers load to soil in end-bearing. Helix plates are available in various diameters and thicknesses.

Lead Section: The first screw anchor component installed into the soil, consisting of single or multiple helix plates welded to a central steel shaft.

Overburden: Non-rock material, natural or placed, typically of soft consistency or loose relative density, which overlies competent load bearing stratum.

Plain Extension: Central steel shaft without helix plates. It is installed following the installation of the lead section or helical extension (if used). The units are connected with integral couplings and bolts. Plain extensions are used to extend the helix plates beyond the specified minimum depth and into competent load bearing stratum.

Proof Test: Incremental loading of an anchor, holding for a period of time, and recording the total movement at each load increment.

Safety Factor: The ratio of the ultimate capacity to the working or design load used for the design of any structural element.

Shaft: Steel shaft or rod used to transfer load from the surface to the bearing-plate(s).

Test Load (TL): The maximum load applied to the anchor during testing.

Working Load (WL): Equivalent term for Design Load.

1.6 Allowable Tolerances

The tolerances quoted in this section are suggested maximums. Depending on the structural applications, the actual values set on a particular project may have to be lower.

1.6.1 At the beginning of anchor installation, the anchor lead tip shall not be more than ±6 inches from staked location.

1.6.2 The angular tolerance between installed anchor angle and design guy angle shall be ±5°.

1.6.3 The final horizontal tolerance shall be ±6 radial inches from design location.

1.7 Quality Assurance

1.7.1 The Contractor shall employ an adequate number of skilled workers who are experienced in the necessary crafts and who are familiar with the specified requirements and methods needed for proper performance of the work of this specification.

1.7.2 All anchors shall be installed in the presence of a designated representative of the Owner unless said representative informs the Contractor otherwise. The designated representative shall have the right to access to any and all field installation records and test reports.

1.7.3 Screw anchor components of anchors as specified therein shall be manufactured by a facility whose quality systems comply with ISO (International Organization of Standards) 9001 requirements. Certificates of Registration denoting ISO Standards Number shall be presented upon request to the Owner or their representative.

1.7.4 Hubbell Power Systems, Inc. provides a standard one-year warranty on materials and workmanship of the product. Any additional warranty provided by the Contractor shall be issued as an addendum to this specification.

1.7.5 Design of screw anchors shall be performed by an entity as required in accordance with existing local code requirements or established local practices. A licensed professional engineer, or a designer depending upon local requirements or practices may perform this design work.

1.8 Design Criteria

1.8.1 Guy anchors shall be designed and configured to meet the specified loads and acceptance criteria as shown on the drawings. The calculations and drawings required from the Contractor or Engineer shall be submitted to the Owner for review and acceptance in accordance to Section 3.1 “Construction Submittals”.

1.8.2 The allowable working load on the anchor shall not exceed the following values:

$$P_{allowt} = S_{ut} / FS$$

Where: P_{allowt} = Allowable working load in tension (kip)
S_{ut} = Minimum ultimate tensile strength of central steel shaft (kip)
FS = Required factor of safety

For permanent applications, it is recommended to use a factor of safety of two (2). For temporary applications, factor of safety typically ranges between 1.25 and 1.5.

It is recommended to use the minimum ultimate tensile strengths as published by Hubbell Power Systems, Inc. (shown in Table-3 of the Appendix).

These allowable working loads may be reduced by the allowable load capacity per helix plate(s). It is recommended to use the allowable helix capacities per screw pier type as published by Hubbell Power Systems, Inc. (shown in Table-3 of the Appendix).

1.8.3 The ultimate structural capacity shall be determined as:

$$P_{ultt} = S_{ut}$$

Where: P_{ultt} = Ultimate structural capacity in tension (kip)

S_{ut} = Minimum ultimate tensile strength of central steel shaft (kip)

It is recommended to use the minimum ultimate tensile strengths as published by Hubbell Power Systems, Inc. (shown in Table-3 of the Appendix).

The ultimate structural capacity may be reduced by the ultimate load capacity per helix plate(s). It is recommended to use the ultimate helix capacities per screw pier type as published by Hubbell Power Systems, Inc. (shown in Table-3 of the Appendix).

It is recommended that the theoretical end-bearing capacity of the helix plates be determined using HeliCAP® v3.0 Helical Capacity Design Software or equal commercially available software. The required soil parameters (c, Φ, γ, or N-values) for use with HeliCAP® v3.0 or equal shall be provided in the geotechnical reports. Probe readings from the CHANCE Soil Test Probe (SKU C30900320) can be converted into input parameters for HeliCAP®. The Owner shall determine the allowable response to axial loads.

Screw anchors are not suited for solid, competent rock, but the helix plates can penetrate into dense bearing soils. It is recommended that screw anchors be installed to a specified minimum torque and depth to ensure the helix plates are terminated in bearing soils. Appropriate and repeatable installation techniques and anchor termination criteria must be identified and verified in the field.

1.8.4 Corrosion Protection

This section is optional (see below). Provisions of this section and Section 4.5 below may not be required in the Specification. If this section is not used, then Section 4.5 should likewise be deleted. The Owner must specify the degree and extent of corrosion protection.

Corrosion protection is a function of structure type, service life, loading condition, and the overall aggressiveness of the project soils. The need for corrosion protection of anchors subjected to tension loads must be carefully determined and specified as necessary.

Corrosion resistant coatings (i.e. epoxy, plastic sheath) on the lead section are impractical due to abrasive action wearing off the coating as the soil flows over the helix plates and around the central steel shaft. Hot dip galvanization is the only practical means to provide a corrosion resistant coating capable of withstanding the rigors of installation. Extension sections are typically hot-dip galvanized, but other coatings can be specified – typically for the top-most section.

The following requirements are typical. The specifier should review and edit as appropriate for the project.

Structure Type: (e.g. temporary, permanent) with a temporary structure being defined within a specified time frame (i.e. months rather than years). In general, permanent structures have a service life greater than 24 months.

Temporary structures do not require corrosion protection.

Service Life: (years) a typical service life of 50 years should be used unless otherwise specified. If the service life of a temporary anchor is likely to be extended due to construction delays, it should be considered permanent.

For a service life of less than 20 years in non-aggressive soil, corrosion protection is not recommended.

Corrosion protection requirements for the various screw anchor elements shall be provided meeting the requirements of Table-1 for:
Soil: Aggressive or Non-Aggressive with optional location and elevation limits defined by the Specifier.

For guidance on aggressiveness classification, see Table-4 in the Appendix. It is recommended to retain the services of a corrosion design professional for very aggressive soils.

1.9. Ground Conditions

A Geotechnical Report, including logs of soil borings or soil test probe readings, shall be considered to be representative of the in-situ subsurface conditions likely to be encountered on the project. Said Geotechnical Report shall be the used as the basis for screw anchor design using generally accepted engineering judgment and methods.

Table-1		
SOIL	**AGGRESSIVE**	**NON-AGGRESSIVE**
LEAD SECTION	a. Galvanization OR b. Minimum 1/8" corrosion loss on outside	a. Bare steel OR b. Galvanization OR c. Minimum 1/8" corrosion loss on outside
EXTENSION SECTION	a. Galvanization AND b. Epoxy/bitumastic/ teflon coating (top section only) OR c. Grout cover1 (top section only) The Specifier may elect to use a grout case.	a.Bare steel OR b. Galvanization OR c. Epoxy/bitumastic/ teflon coating (top section only) OR d. Grout cover1 (top section only)
NOTES: Lettered items are options. For guidance on aggressiveness classification, see Table-4 in the Appendix. 1. Minimum 1" in soil.		

If during screw anchor installation, subsurface conditions of a type and location are encountered of a frequency that were not reported, inferred and/or expected, the additional costs required to overcome such conditions shall be considered as extras to be paid for.

All available information related to subsurface and general site conditions should be made available to the Contractor. It is not reasonable to expect the Contractor to conduct supplemental site investigations at their own risk and cost prior to start of work, unless the specific contract requirements call for it and provide for appropriate compensation.

2. REFERENCED CODES AND STANDARDS

Standards listed by reference, including revisions by issuing authority, form a part of this specification section to the extent indicated. Issuing authority, authority abbreviation, designation number, title, or other designation established by issuing authority, identifies standards listed. Issuing authority abbreviation and standard designation refers to standards subsequently referenced herein. In case of conflict, the particular requirements of this specification shall prevail. The latest publication as of the issue of this specification shall govern, unless indicated otherwise.

2.1 American Society of Civil Engineers (ASCE):

2.1.1 ASCE Manuals and Reports on Engineering Practice No. 91 – *Design of Guyed Electrical Transmission Structures*, Copyright 1997 by the American Society of Civil Engineers.

2.1.2 ASCE Geotechnical Special Publication No. 8 – *Foundations for Transmission Line Towers*, Copyright 1987 by the American Society of Civil Engineers.

2.2 Institute of Electrical and Electronics Engineers, Inc. (IEEE):

2.2.1 IEEE Standard 977-2011 - *Guide to Installation of Foundations for Transmission Line Structures*, Copyright 1991 by the Institute of Electrical and Electronics Engineers, Inc.

3. SUBMITTALS

3.1 Construction Submittals

3.1.1 The Contractor or Engineer shall prepare and submit to the Owner, for review and approval, working drawings and design calculations for the screw anchor intended for use at least 14 calendar days prior to planned start of construction (but note also Paragraph 3.1.7).

3.1.2 The Contractor shall submit a detailed description of the construction procedures proposed for use to the Owner for review. This shall include a list of major equipment to be used.

3.1.3 The Working Drawings shall include the following:

3.1.3.a Owner's line number, structure number, and anchor designation/location

3.1.3.b Screw anchor design load

3.1.3.c Type and size of central steel shaft

- Type SS5/SS150 – 1-1/2" RCS,
- Type SS175 – 1-3/4" RCS,
- Type SS200 – 2" RCS,
- Type SS225 – 2-1/4" RCS.

3.1.3.d Helix configuration (number and diameter of helix plates)
3.1.3.e Minimum effective installation torque
3.1.3.f Minimum overall length
3.1.3.g Installation angle of screw anchor

If the number of helix plates per screw anchor required for the project is not shown on the Working Drawings, the Contractor shall have the option of performing subsurface tests using methods subject to the review and acceptance of the Owner. The data collected along with other information pertinent to the project site shall be used to determine the required helix configuration.

3.1.4 The Contractor shall submit shop drawings for all screw anchor components and guy attachments to the Owner for review and approval. This includes screw anchor lead and extension section identification (manufacturer's catalog numbers).

Sales drawings for screw anchor components, including guy attachments, can be obtained by contacting Hubbell Power Systems, Inc. Customer Service.

3.1.5 The Contractor shall submit plans for production testing for the screw anchors to the Owner for review and acceptance prior to beginning load tests. The purpose of the test is to verify the design load capacity and evaluate deflection response.

It is the responsibility of the Owner to establish acceptance criteria for screw anchor proof load tests, which can be incorporated into the project specific specification. Additional purpose of load tests is to empirically correlate the capacity to the average installing torque of the screw anchor for a specific project site.

3.1.6 The Contractor shall submit to the Owner copies of calibration reports for each torque indicator and all load test equipment to be used on the project. The calibration tests shall have been performed within one year of the date submitted. Screw anchor installation and testing shall not proceed until the Owner has received the calibration reports. These calibration reports shall include, but are not limited to, the following information:

3.1.6.a Name of project and Contractor
3.1.6.b Name of testing agency, if applicable
3.1.6.c Identification (serial number) of device calibrated
3.1.6.d Description of calibrated testing equipment
3.1.6.e Date of calibration
3.1.6.f Calibration data

Load test equipment includes load cylinders, pressure gauges, and load transducers. Hubbell Power Systems, Inc. Wireless Torque Indicator with Bluetooth (SKU C3031836) is calibrated prior to final assembly. For annual calibration services, contact Hubbell Power Systems, Inc. Customer Service.

3.1.7 Work shall not begin until all the submittals have been received and approved by the Owner. The Contractor shall allow the Owner a reasonable time to review, comment, and return the submittal package after a complete set has been received. All costs associated with incomplete or unacceptable submittals shall be the responsibility of the Contractor.

3.2 Installation Records

The Contractor shall provide the Owner copies of screw anchor installation records within 24 hours after each installation is completed. Formal copies shall be submitted on a weekly basis. These installation records shall include, but are not limited to, the following information.

3.2.1 Owner's line number, structure number, and anchor designation/location

3.2.2 Name of Contractor's supervisor during installation

3.2.3 Date and time of installation

3.2.4 Name and model of installation equipment

3.2.5 Type of torque indicator used

3.2.6 Actual screw anchor type and configuration – including lead section (number and size of helix plates), number and type of extension sections (manufacturer's SKU numbers)

3.2.7 Screw anchor installation duration and observations

3.2.8 Total length of installed screw anchor

3.2.9 Installation angle of screw anchor

3.2.10 Installation torque at one-foot intervals for the final 3 feet

3.2.11 Comments pertaining to interruptions, obstructions, or other relevant information

3.2.12 Rated load capacities

3.3 Test Reports

The Contractor shall provide the Owner copies of field test reports within 24 hours after completion of the load tests. Formal copies shall be submitted within a reasonable amount of time following test completion. These test reports shall include, but are not limited to, the following information (note Section 6 – Anchor Load Tests).

3.3.1 Owner's line number, structure number, and anchor designation/location

3.3.2 Name of Contractor's supervisor during installation

3.3.3 Date, time, and duration of test

3.3.4 Description of calibrated testing equipment and test set-up

3.3.5 Actual screw anchor type and configuration – including lead section, number and type of extension sections (manufacturer's SKU numbers)

3.3.6 Steps and duration of each load increment

3.3.7 Cumulative anchor movement at each load step

3.3.8 Comments pertaining to test procedure, equipment adjustments, or other relevant information

3.4 Closeout Submittals

3.4.1 Warranty: Warranty documents specified herein

3.4.1.a Project Warranty: Refer to Conditions of the Contract for project warranty provisions

Coordinate the warranty period stated herein with the project warranty as stated in the Contract documents.

Warranty Period: (Specify Term) years commencing on date of Substantial Completion

3.4.1.b Manufacturer's Warranty: Submit, for Owner's Acceptance, manufacturer's standard warranty document executed by authorized company official. Manufacturer's warranty is in addition to, and not a limitation of, other rights the Owner may have under Contract Document.

4. PRODUCTS AND MATERIALS

4.1 Central Steel Shaft:

The central steel shaft, consisting of lead sections, helical extensions, and plain extensions, shall be CHANCE® Type SS as manufactured by Hubbell Power Systems, Inc. (Centralia & Independence, MO).

4.1.1 **SS5 1-1/2" Material:** Shall be hot rolled Round-Cornered-Square (RCS) solid steel bars meeting dimensional and workmanship requirements of ASTM A29. The bar shall be modified medium carbon steel grade (similar to AISI 1044) with improved strength due to fine grain size.

4.1.1.a Torsional strength rating = 5,700 ft.-lbs.
4.1.1.b Minimum yield strength = 70 ksi

4.1.2 **SS150 1-1/2"; SS175 1-3/4; SS200 2"; SS225 2-1/4" Material:** Shall be hot rolled Round-Cornered-Square (RCS) solid steel bars meeting the dimensional and workmanship requirements of ASTM A29. The bar shall be High Strength Low Alloy (HSLA), low to medium carbon steel grade with improved strength due to fine grain size.

4.1.2.a Torsional strength rating: SS150 = 7,000 ft.-lbs.; SS175 = 10,500 ft.-lbs.; SS200 = 16,000 ft.-lbs.; SS225 = 21,000 ft.-lbs.
4.1.2.b Minimum yield strength = 90 ksi

4.2 Helix Bearing Plate:

Shall be hot rolled carbon steel sheet, strip, or plate formed on matching metal dies to true helical shape and uniform pitch. Bearing plate material shall conform to the following ASTM specifications.

4.2.1 **SS5 Material:** Steel sheet, strip, or plate per ASTM A572 Grade 50, with minimum yield strength of 50 ksi. Plate thickness is 3/8".

4.2.2 **SS150 and SS175 Material:** Per ASTM A656 or A1018 with minimum yield strength of 80 ksi. Plate thickness is 3/8" or ½" depending on helix diameter.

4.2.3 **SS200 and SS225 Material:** Per ASTM A656 or A1018 with minimum yield strength of 80 ksi. Plate thickness is ½".

4.3 Bolts:

The size and type of bolts used to connect the central steel shaft sections together shall conform to the following ASTM specifications.

4.3.1 **SS5 and SS150 1-1/2" Material:** ¾" diameter bolt per ASTM A193 Grade B7 w/ cold weather properties.

4.3.2 **SS175 1-3/4" Material**: 7/8" diameter bolt per ASTM A193 Grade B7 w/ cold weather properties.

4.3.3 **SS200 2" Material:** 1-1/8" diameter bolt per ASTM A193 Grade B7.

4.3.4 **SS225 2-1/4" Material:** 1-1/4" diameter bolt per ASTM A193 Grade B7.

4.4 Couplings:

Shall be formed as integral part of the plain and helical extension material. For Type SS material, the couplings shall be hot upset forged sockets.

4.5 Corrosion Protection (Optional)

The corrosion protection requirements, if any, are identified in Section 1.8.4. The Specifier may elect to delete this section entirely if no corrosion protection materials are required such as for anchors in non-aggressive ground.

4.5.1 **Epoxy Coating:** If used, the thickness of coating applied electrostatically to the central steel shaft shall be 7-12 mils. Epoxy coating shall be in accordance with ASTM A775. Bend test requirements are not required. Coupling bolts, nuts, and displacements plates are not required to be epoxy coated.

4.5.2 **Bitumastic Coating:** If used, the coating shall be applied via spray-on or brush techniques as recommended by the coating manufacturer. If required, multiple coats shall be applied to achieve minimum recommended thickness.

4.5.3 **Teflon Coating:** If used, the coating shall be applied via roll or adhesive backed tape as recommended by the coating manufacturer. If required, multiple layers shall be applied to achieve minimum recommended thickness.

4.5.4 **Galvanization:** If used, all Hubbell Power Systems, Inc. Type SS material shall be hot-dipped galvanized in accordance with ASTM A153 after fabrication.

5. EXECUTION

5.1 Site Conditions

5.1.1 Prior to commencing screw anchor installation, the Contractor shall inspect the work of all other trades and verify that all said work is completed to the point where screw anchors may commence without restriction.

5.1.2 The Contractor shall verify that all screw anchors may be installed in accordance with all pertinent codes and regulations regarding such items as underground obstructions, right-of-way limitations, utilities, etc.

5.1.3 In the event of a discrepancy, the Contractor shall notify the Owner. The Contractor shall not proceed with screw anchor installation in areas of discrepancies until said discrepancies have been resolved. All costs associated with unresolved discrepancies shall be the responsibility of the Owner.

5.2 Installation Equipment

5.2.1 Shall be rotary type, hydraulic power-driven torque motor with clockwise and counter-clockwise rotation capabilities. The torque motor shall be capable of continuous adjustment to revolutions per minute (RPM's) during installation. Percussion drilling equipment shall not be permitted. The torque motor shall have torque capacity 15% greater than the torsional strength rating of the central steel shaft to be installed.

Helical screw anchors should be installed with high torque, low RPM torque motors, which allow the helical screw plates to advance with minimal soil disturbance.

5.2.2 Equipment shall be capable of applying adequate down pressure (crowd) and torque simultaneously to suit project soil conditions and load requirements. The equipment shall be capable of continuous position adjustment to maintain proper anchor alignment.

5.3 Installation Tooling

5.3.1 Shall consist of a CHANCE® brand Kelly Bar Adapter (KBA) and Type SS Drive Tool as manufactured by Hubbell Power Systems, Inc. and used in accordance with the manufacturer's written installation instructions.

Installation tooling should always be maintained in good working order and safe to operate. Flange bolts and nuts should be regularly inspected for proper tightening torque. Bolts, connecting pins, and retainers should be periodically inspected for wear and/or damage and replaced with identical items provided by the manufacturer. Heed all warning labels. Worn or damaged tooling should be replaced.

5.3.2 A torque indicator shall be used during screw anchor installation. The torque indicator can be an integral part of the installation equipment or externally mounted in-line with the installation tooling. Torque indicators, such as the Shear Pin Torque Limiter or Wireless Torque Indicator with Bluetooth (SKU C3031836) are available from Hubbell Power Systems, Inc.

5.3.2.a Shall be capable of providing continuous measurement of applied torque throughout the installation.

5.3.2.b Shall be capable of torque measurements in increments of at least 500 ft.-lbs.

5.3.2.c Shall be calibrated prior to start of work. Torque indicators which are an integral part of the installation equipment, shall be calibrated on-site. Torque indicators which are mounted in-line with the installation tooling, shall be calibrated either on-site or at an appropriately equipped test facility. Indicators that use hydraulic pressure as a function of torque shall be calibrated at normal operating temperatures.

5.3.2.d Shall be re-calibrated, if in the opinion of the Owner and/or Contractor reasonable doubt exists as to the accuracy of the torque measurements.

5.4 Guy Anchor Relocation

5.4.1 Any given guy anchor can be relocated a maximum of _____ feet (5 feet typical) in any direction if an obstruction exists or is encountered during installation. Relocation greater than _____ feet (5 feet typical) shall be subject to review and acceptance of the Owner.

5.4.2 If center of structure is relocated, the guy anchors shall be appropriately relocated subject to review and acceptance of the Owner.

5.5 Guy Anchor Spacing

5.5.1 Guy anchors shall be horizontally spaced nominally five helix diameters center-to-center. Use the largest helix diameter to make the spacing determination (i.e., if a 12" diameter is the largest helix, the required horizontal spacing is 5x12" = 60" = 5 ft).

5.5.2 As a minimum, guy anchors shall be horizontally spaced no closer than three feet center-to-center.

5.6 Installation Procedures

5.6.1 The screw anchor installation technique shall be such that it is consistent with the geotechnical, logistical, environmental, and load carrying conditions of the project.

5.6.2 The lead section shall be positioned at the location as shown on the working drawings. Installation shall begin with the screw anchor in the near vertical position. Within the first 1-1/2 foot of installation, the proper guy angle shall be established. Thereafter, said guy angle shall be maintained during the remaining installation. The screw anchor sections shall be engaged and advanced into the soil in a smooth, continuous manner at a rate of rotation of 5 to 20 RPM's.

5.6.3 Extension sections shall be provided to obtain the required minimum overall length and installation torque as shown on the working drawings. Connect sections together using coupling bolt and nut torqued to 40 ft.-lbs. Use coupling bolts provided with extension sections.

5.6.4 Sufficient down pressure shall be applied to uniformly advance the screw anchor sections approximately 3 inches per revolution. The rate of rotation and magnitude of down pressure shall be adjusted for different soil conditions and depths.

5.7 Termination Criteria

5.7.1 The torque as measured during the installation shall not exceed the torsional strength rating of the central steel shaft.

5.7.2 The minimum installation torque and minimum overall length criteria as shown on the working drawings shall be satisfied prior to terminating the screw anchor.

5.7.3 If the torsional strength rating of the central steel shaft and/or installation equipment has been reached prior to achieving the minimum overall length required, the Contractor shall have the following options:

5.7.3.a Terminate the installation at the depth obtained subject to the review and acceptance of the Owner, or:

5.7.3.b Remove the existing screw anchor and install a new one with fewer and/or smaller diameter helix plates. The new helix configuration shall be subject to review and acceptance of the Owner. If re-installing in the same location, the new screw anchor shall be terminated at least (3) three feet beyond the terminating depth of the original screw anchor.

It is generally not recommended to re-use screw anchor shaft material after it has been permanently twisted during a previous installation. The three feet dimension cited in paragraph 5.7.3.b should be measured from the top-most helix on the re-installed screw anchor.

5.7.4 If the minimum installation torque as shown on the working drawings is not achieved at the minimum overall length, and there is no maximum length constraint, the Contractor shall have the following options:

5.7.4.a Install the screw anchor deeper using additional extension sections, or:

5.7.4.b Remove the existing screw anchor and install a new one with additional and/or larger diameter helix plates. The new helix configuration shall be subject to review and acceptance of the Owner. If re-installing in the same location, the new screw anchor shall be terminated at least (3) three feet beyond the terminating depth of the original screw anchor.

5.7.5 If the screw anchor is refused or deflected by a subsurface obstruction, the installation shall be terminated and the anchor removed. The obstruction shall be removed, if feasible, and the screw anchor re-installed. If obstruction can't be removed, the screw anchor shall be installed at an adjacent location, subject to review and acceptance of the Owner (see Section 5.4).

5.7.6 The average torque for the last three feet of penetration shall be used as the basis of comparison with the minimum installation torque as shown on the working drawings. The average torque shall be defined as the average of the last three readings recorded at one-foot intervals.

Twisting of Type SS material during installation is normal and does not decrease the strength of the steel. Failure of the shaft in torsional shear will not occur provided the mechanical torsion ratings of the Type SS material are not exceeded (see Table-3 in the Appendix). Shaft twist is a visible indicator of torque and can be used to verify that the helix plate(s) have been installed into bearing soil. Shaft twist shall not be used as the sole torque indicating device since it exhibits a possible range of torque values, not the actual torque.

The average torque can be empirically related to the screw anchor's ultimate capacity in end-bearing. This well-known attribute of helical screw anchors can be used as a production control method to indicate guy anchor capacity.

Obstruction laden soils that contain weathered rock lenses or chunks can create torque "transients" that are not indicative of the true strength of the soil. Torque transients can be either torque spikes or drops that should not be used when determining the average installation torque. Obstruction laden soils can also cause a screw anchor to "refuse" or stop penetrating. Continuous rotation and crowd (down pressure) can eventually clear the obstruction, but if not, the screw anchor should be removed and the obstruction cleared, if possible. If the obstruction cannot be removed, the screw anchor should be relocated as detailed in Section 5.4.

5.7.7 After the specified minimum installation torque and minimum overall length requirements are met, the amount of shaft section extending above ground shall not exceed 18 inches. If the torsional service rating of the central steel shaft has not been reached, the screw anchor may be driven deeper until the specified above-ground extension is achieved. If the screw anchor cannot be driven deep enough to achieve the specified above-ground extension, the last extension shall be removed and replaced with a shorter length one. This shall be done by excavating down along the shaft to the coupling, not by reversing or unscrewing the anchor.

5.8 Guy Anchor Vertical Depth

5.8.1 Guy anchors shall be installed such that the minimum vertical distance between the upper-most helix and the soil surface is:

5.8.1.a Five feet, OR

5.8.1.b Five times the largest helix diameter (i.e., if a 10" diameter is the largest helix, the required vertical depth is 5x10" = 50" = 4.2 ft).

Item 5.8.1.a is the preferred acceptance criteria for vertical depth, since it ensures the helix bearing plate is located deep enough for virtually all soil conditions. Item 5.8.1.b shall be used when helix plate(s) l0"diameter and less are used in soils that warrant installed depths less than 5'-0 vertical.

6. ANCHOR UPLIFT LOAD TESTS

6.1 Production Anchor Proof Tests

The Contractor shall submit for review and acceptance the proposed anchor load testing procedure. The proof test proposal shall be in general conformance with ASTM D-3689, and shall provide the minimum following information:

- Type and accuracy of load equipment
- Type and accuracy of load measuring equipment
- Type and accuracy of pile-head deflection equipment
- General description of load reaction system
- Calibration report for complete load equipment, including dynamometers, hydraulic jack, pump, pressure gauge, hoses, and fittings.

6.2 Load Test Procedures

The hydraulic jack shall be positioned at the beginning of the test such that the unloading and repositioning of the jack during the test shall not be required. The hydraulic jack shall be capable of applying a load not less than two times the proposed design load (DL).

An alignment load (AL) shall be applied to the anchor prior to setting the deflection measuring equipment to zero or a reference position. The AL shall be no more than 10% of the design load (i.e., 0.1 DL). After AL is applied, the test set-up shall be inspected carefully to ensure it is safe to proceed.

Uplift load tests shall be conducted by loading the anchor in step-wise fashion as shown in Table-2 to the extent practical. Anchor deflection shall be recorded at the beginning of each step and after the end of the hold time. The beginning of the hold time shall be defined as the moment when the load equipment achieves the required load step.

The applied test load shall be removed in four approximately equal decrements per the schedule in Table-2. The hold time for these load decrements shall be 1 minute.

The Contractor shall proof test no less than 3% of the production anchors. The anchors to be tested will be selected by the Owner. At the Contractor's suggestion, but with the Owner's permission, uplift tests may be performed on non-production screw anchors installed vertically to the same vertical depth and torque in the same general location as production anchors. ***If non-production anchors are tested, the requirements of Table-2 may be regarded as a minimum. However, it is recommended to test non-production anchors to values up to 2.0 DL to provide an estimation of the ultimate uplift load capacity. The Owner shall determine the maximum non-production anchor test load. For example, ASTM D-3689 stipulates testing to 2.0 DL.***

Table-2. Steps for Production Proof Load Testing

LOAD STEP	HOLD TIME (MINUTES)
AL	0 Min.
0.20 DL	4.0 Min.
0.40 DL	4.0 Min.
0.60 DL	4.0 Min.
0.80 DL	4.0 Min.
1.00 DL	5 Min.
0.60 DL	1 Min.
0.40 DL	1 Min.
0.20 DL	1 Min.
AL	5 Min.
AL = Alignment Load; DL = Design Load	

6.3 Acceptance Criteria

1. The screw anchor shall sustain the uplift design capacity (1.0 DL) with no more than _____ in. (1 inch [25.4mm] typical) total movement along the shaft of the anchor as measured relative to the top of the anchor prior to the start of testing. ***(Note that uplift loads are limited to the minimum ultimate tensile strength of the coupling joint(s) of the central steel shaft. It is recommended to use the minimum ultimate tensile strengths as published by Hubbell Power Systems, Inc. (shown in Table-3 of the Appendix).***

   The Contractor shall provide the Owner copies of proof test reports confirming screw anchor configuration and construction details within 24 hours after completion of the load tests. Formal copies shall be submitted as per Section 3.3. This written documentation will either confirm the load capacity as required on the working drawings or propose changes based upon the results of the proof tests.

If a screw anchor that is proof tested fails to meet the acceptance criteria, the Contractor shall be directed to proof test another screw anchor in the vicinity. For failed anchors and further construction of other anchors, the Contractor shall modify the design, the construction procedure, or both. These modifications include, but are not limited to, installing replacement anchors, modifying the installation methods and equipment, increasing the minimum effective installation torque, changing the helix configuration, or changing the screw anchor material (i.e., central steel shaft). Modifications that require changes to the screw anchor shall have prior review and acceptance of the Owner.

APPENDIX

Table-3. Mechanical Strength Ratings – CHANCE® Helical Screw Anchors

RATING TYPE	CENTRAL STEEL PRODUCT SERIES				
	SS5 1-1/2" RCS	SS150 1-1/2" RCS	SS175 1-3/4" RCS	SS200 2" RCS	SS225 2-1/4" RCS
Torque Strength Rating (ft-lb)	5,700	7,000	10,500	16,000	21,000
Mechanical Strength Per Helix** (kip) (Tension)	44	50	52	115	126
Allowable Capacity Per Helix w/ 2.0 Safety Factor (kip) (Tension)	22	25	26	57.5	63
Ultimate Tension Strength* (kip)	70	70	100	150	200

* Based on Mechanical Strength of Coupling

** The mechanical strength ratings of helix plates in the Table above are minimum values. The helix diameter, grade, and thickness along with the shaft series to which an individual helix is connected effect the mechanical strength rating of the helix.

NOTE: Actual installed (geotechnical) capacities are dependent on existing soil conditions.

Soil tests may be performed to measure the aggressiveness of the soil environment, especially if field observations indicate corrosion of existing structures. The most common and simplest tests are for electrical resistivity, pH, chloride, and sulfates. The designation for these tests and the critical values defining whether an aggressive soil environment exists, are as shown below in Table-4. Per FHWA-RD-89-198, the ground is considered aggressive if any one of these indicators shows critical values.

Table-4. Guidance Of Ground Aggressiveness Classification

Property	Test Designation	Critical Values
Resistivity	ASTM G 57 AASHTO T-288	below 2,000 ohm-cm
pH	ASTM G 51 AASHTO T-289	below 5
Sulfate	ASTM D 516M ASTM D 4327	above 200 ppm
Chloride	ASTM D 512 ASTM D 4327 AASHTO T-291	above 100 ppm
Organic Content	AASHTO T-267	1% max

For product inquiries, please contact your local sales representative or customer service representative.

©2021 Hubbell Incorporated.
Because Hubbell has a policy of continuous product improvement, we reserve the right to change design and specifications without notice.
Printed in the U.S.A. | TD06160E

Model Specification: Chance® GroutForce™ Screw Displacement Pile for Structural Support

These products must be installed by Contractors certified by Hubbell Power Systems, Inc.

PREFACE

TYPES OF SPECIFICATIONS:

There are three types of specifications that are used for Chance GroutForce screw displacement pile (GDP) projects:

- **Open Specifications:** The Contractor is given the responsibility for the scope and design of the GDP installation. In addition, the construction, capacity, and performance of the GDP are the sole responsibility of the Contractor. This specification assumes that the Owner or Designer has provided the required structural loads. This specification type is most common for securing bids on temporary projects, and is not recommended for permanent applications.
- **Performance Specifications:** The Contractor is given the responsibility for certain design and/or construction procedures but must demonstrate to the Owner through testing and/or mutually agreed upon acceptance criteria that the production piles meet or exceed the specified performance parameters. This specification assumes that the location and the required loads of the GDP have been specified. The Contractor and Owner share the responsibility for the work.
- **Prescriptive Specifications:** The Owner has the sole responsibility for the scope and design of the GDP installation and specifies the procedures that must be followed. Prescriptive specifications mandate the Owner to be responsible for the proper performance of the production piles. The Contractor is responsible for fulfilling the obligations/details as specified in the construction documents.

Performance specifications are the most common and allow certified Contractors to use their unique installation methods and experience for any given site conditions. Owners receive the benefit of value engineering, which can result in lower costs.

The Owner, Designer, and Contractor will be jointly responsible for the design, installation, acceptance, and performance of GDPs. The installation of a GDP requires specialized equipment, techniques, and trained work crews. Every detail of the work cannot be specified, and any potential problem cannot be anticipated. Therefore, a contractor trained and certified by Hubbell Power Systems, Inc. must be selected.

A list of the major tasks to be performed on a GDP project is shown in Table-1 of the Model Specifications. The Owner or his representative should select the type of specification and procurement method. The party responsible for each task must be identified and mutually agreed upon at the earliest point in the contracting process. The completed Table-1 should be included in the construction documents. The process of continuous communication between all the parties involved is essential to achieve a satisfactory result. Clear communication and close cooperation are particularly important in the start-up phase and in testing. In addition, timely preparation and review of all submittals is critical.

This model specification can be adapted to each of the three types of specifications. However, it is primarily written for the performance type. The identity of the "Contractor" and the "Owner" is always well defined, unlike that of the "Designer" or "Engineer". For example, the "Engineer" may be an employee(s) of the Contractor, or a third-party consultant hired to secure a lower cost alternative during the bidding process.

Figure 1. Typical Cross Section

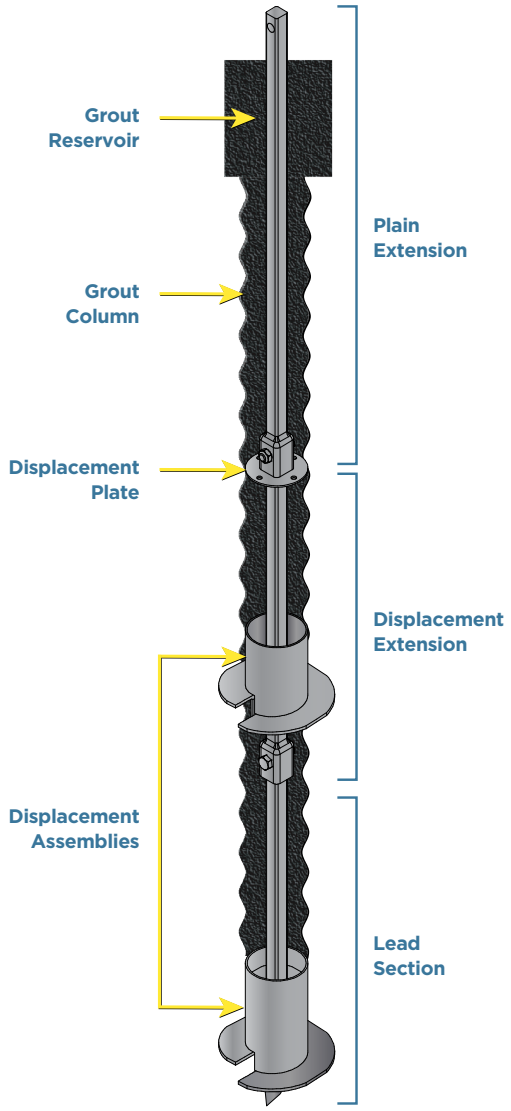

In contrast, the "Engineer" may be the Owner, an employee(s) of the Owner, or a representative hired by the Owner. It is recommended that the Engineer be a third-party agency employed by the Owner to serve in the owner's best interests during the various stages of the contract.

For purposes of this Model Specification, the subject is a high-capacity screw displacement pile (GDP). Maximum working or design loads are in the 75–150-ton range. The GDP consists of displacement devices attached along a central steel shaft surrounded by a column of grout, gravity-fed from the surface into the annulus formed by the displacement device around the central steel shaft. The grout column is typically 8 inches to 13 inches in diameter and will accept load directly axially and/or laterally to provide structural support. Additional steel reinforcement consisting of re-bar or casing can be incorporated into the GDP to increase its load carrying capacity.

Table of Contents: Chance® GroutForce™ Screw Displacement Pile for Structural Support

1. GENERAL
1.1 Purpose of Specification
1.2 Scope of Work
1.3 Qualifications of the Contractor
1.4 Related Project Specifications
1.5 Definitions
1.6 Allowable Tolerances
1.7 Quality Assurance
1.8 Design Criteria
1.9 Ground Conditions

2. REFERENCED CODES AND STANDARDS
2.1 American Society for Testing and Materials
2.2 American Welding Society
2.3 American Society of Civil Engineers
2.4 Deep Foundations Institute
2.5 Post Tensioning Institute
2.6 Society of Automotive Engineers

3. SUBMITTALS
3.1 Construction Submittals
3.2 Installation Records
3.3 Test Reports
3.4 Closeout Submittals

4. PRODUCTS AND MATERIALS
4.1 Central Steel Shaft
4.2 Bolts
4.3 Couplings
4.4 Plates, Shapes, or Pier Caps
4.5 Water
4.6 Cement
4.7 Admixtures
4.8 Aggregate
4.9 Corrosion Protection (Optional)

5. EXECUTION
5.1 Site Conditions
5.2 Installation Equipment
5.3 Installation Tooling
5.4 Installation Procedures
5.5 Termination Criteria
5.6 Connecting GDP to Structure

6. CHANCE GROUTFORCE PILE TESTS
6.1 Pre-Production Pile Tests (Optional)
6.2 Load Test Procedures
6.3 Acceptance Criteria for Verification Load Tests
6.4 Production Pile Testing
6.5 Lateral Testing

7. MEASUREMENT AND PAYMENT

APPENDIX: Table-A. Guidance of Ground Aggressiveness Classification

Model Specification: Chance® GroutForce™ Screw Displacement Pile for Structural Support

1. GENERAL

1.1 Purpose of Specification

The purpose of this specification is to detail the furnishing of all designs, materials, tools, equipment, labor supervision, and installation techniques necessary to install a CHANCE GroutForce Screw Displacement pile (GDP) as detailed on the drawings, including pile-top details. This shall include provisions for load testing that may be part of the scope of work

Specifier Note: This specification may require modification to account for unusual and/or unforeseen site and subsurface conditions and the particular circumstances of the project.

1.2 Scope of Work

This work consists of furnishing all necessary engineering and design services (if required), supervision, labor, tools, materials, and equipment to perform all work necessary to install the GDP, at (location, City, State/Province) for (Company, State/Province or Private Authority) per the specifications described herein, and as shown on the drawings. The Contractor shall install a GDP that will develop the load capacities as detailed on the drawings. This may also include provisions for load testing to verify pile capacity and deflection, if part of the scope of work. The responsibilities and duties of the respective parties for this project are summarized in Table-1.

1.3 Qualifications of the GDP Contractor

The GDP Contractor shall be experienced in performing design and construction of GDP and shall furnish all materials, labor, and supervision to perform the work. The Contractor shall be trained and certified by Hubbell Power Systems, Inc. in the proper methods of design and installation of the patented GDP system. The Contractor shall provide names of on-site personnel materially involved with the work, including those who carry documented certification from Hubbell Power Systems, Inc. At a minimum, these personnel shall include foreman, machine operator, and project engineer/manager. The GDP Contractor shall not sublet the whole or any part of the contract without the express written permission of the Owner.

Table-1. Tasks and Responsibilities to be Allocated for GDP Work

	TASK	RESPONSIBLE PARTY*
1	Site Investigation, Geotechnical Investigation, Site Survey, and potential work restrictions	
2	Type of specification, requirement for a pre-contract testing program, and procurement method	
3	Obtaining easements	
4	Overall scope of work, design of the piled structure - including design loads (vertical, horizontal, etc.), pile locations, and pile spacing and orientation	
5	Definition and qualification of safety factors	
6	Calculation/estimation of allowable structural and/or pile movement in service (acceptance criteria)	
7	Definition of service life (temporary – months or permanent - years) and required degree of corrosion protection based on site conditions	
8	Type and number of tests (pre-contract, pre-production and production)	
9	Minimum total pile length, depth to bearing stratum	
10	Chance GroutForce Pile components and details	
11	Details of corrosion protection	
12	Details of pile connection to structure (e.g., for static and seismic conditions)	
13	Preparation of Drawings and test reports	
14	Evaluation of test results	
15	Construction methods, schedule, sequencing, and coordination of work	
16	Requirements of field production control, including logging of installation torque vs. installed depth vs. grout take per foot depth	
17	Supervision of work	
18	Long-term monitoring	

** To be filled in by specification writer.*

1.4 Related Project Specifications

To be determined by the specification writer.

1.5 Definitions

A partial list follows. The Owner may wish to add other specific, project-related items.

Admixture: Substance added to the grout to either control bleed and/or shrinkage, improve flowability, reduce water content, retard setting time, or resist washout.

Alignment Load (AL): A nominal load applied to a GDP during testing to keep the testing equipment correctly positioned and remove any slack in the reaction system.

Bearing Stratum: Soil layer(s) of sufficient strength capable of resisting the applied axial load transferred by the GDP.

Bonded Length: The length of the GDP grout column that is bonded to the soil and which is used to transfer the applied axial load to the surrounding soil.

Contractor: The person/firm responsible for performing the GDP work.

Coupling: Central steel shaft connection means formed as welded plates, sleeves, or as integral part of the extension shaft material.

Creep: The movement that occurs during the creep test of a GDP under a constant load.

Design Load (DL): Maximum anticipated service load applied to the GDP. Also known as the working load (WL).

Displacement Extension: Central steel shaft with at least one displacement device. Installed following the lead section.

Elastic Movement: The recoverable movement measured during a GDP test resulting from the elastic shortening or lengthening of the pile material.

Grout: Portland cement-based grout that is gravity fed into the annular volume surrounding the central steel shaft during installation. The fine aggregate and admixtures provide flowability, resist washout, and provide additional corrosion protection. Provides the load transfer in skin friction to the surrounding soil along the length of the GDP.

Chance GroutForce Pile (GDP): A screw displacement cast-in-place pile, in which the applied load is resisted by the central steel shaft and grout column. Load transfer to soil is frictional.

Displacement Assemblies: Soil displacement means used to create the annular volume surrounding the central steel shaft. The devices vary depending on the size of the central steel shaft, the pile design, the soils, and the applied load to the pile.

Lead Displacement Assembly: The first pile component installed into the soil, consisting of one or multiple displacement devices.

Net Settlement: The non-elastic (non-recoverable) movement of an GDP measured during load testing.

Overburden: Non-rock material, natural or placed, typically of soft consistency or loose relative density, which overlies competent load bearing stratum.

Pile Cap: Connection means by which structural loads are transferred to the GDP. The type of connection varies depending upon the requirements of the project and type of GDP material used. Care must be used in the design of pile caps to ensure adequate structural load transfer. Design constraints such as expansive soils, compressible soils, and seismic loads must be accounted for in pile cap design.

Extension: Central steel shaft without displacement assemblies. It is installed following the installation of the lead & extension displacement assemblies. The units are connected with integral couplings and bolts.

Preloading: Also known as prestressing, load is applied to the GDP prior to connection to structure, to minimize structural movement in service.

Proof Test: Incremental loading of a GDP, holding for a period of time, and recording the total movement at each load increment.

Safety Factor: The ratio of the ultimate capacity to the working or design load used for the design of any structural element.

Test Load (TL): The maximum load applied to the GDP during testing.

Ultimate Capacity (UC): Limit state based on the structural and/or geotechnical capacity of the GDP defined as the point at which no additional capacity can be justified.

Verification Test (VL): Similar to a Proof Test except a cyclic loading method is used to analyze total, elastic, and net movement of the pile. Used for precontract or pre-production pile load tests.

Working Load (WL): Equivalent term for Design Load.

1.6 Allowable Tolerances

The tolerances quoted in this section are suggested maximums. The actual values established for a particular project will depend on the structural application and site conditions.

1.6.1 Piles shall be installed from the ground surface existing after excavation work has been completed.

1.6.2 Centerline of central steel shaft shall not be more than 3 inches from indicated plan location.

1.6.3 Pile plumbness shall be within 2° of design alignment.

1.6.4 Top elevation of pile shall be within +1 inch to -2 inches of the design vertical elevation.

1.6.5 The centerline of central steel shaft shall not be more than 3/4 inches from the centerline of the pile.

1.6.6 No pile shall be left partially completed overnight but must be completely grouted and protected at the termination of each day's operation.

1.7 Quality Assurance

1.7.1 The GDP shall be installed by authorized Hubbell Power Systems, Inc. Certified Contractors. These Contractors shall have satisfied the certification requirements relative to the technical aspects of the product and installation procedures as therein specified. Certification documents shall be provided upon request to the Owner or their representative.

1.7.2 The certified Contractor shall employ an adequate number of skilled workers who are experienced in the necessary crafts and who are familiar with the specified requirements and methods needed for proper performance of the work of this specification.

1.7.3 All GDPs shall be installed in the presence of a designated representative of the Owner unless said representative informs the Contractor otherwise. The designated representative shall have the right to access all field installation records and test reports.

1.7.4 Components of GDP's as specified therein shall be manufactured by a facility whose quality systems comply with ISO (International Organization of Standards) 9001 requirements. Certificates of Registration denoting ISO Standards Number shall be presented upon request to the Owner or their representative.

1.7.5 Hubbell Power Systems, Inc. provides a standard one-year warranty on materials and workmanship of the product. Any additional warranty provided by the Contractor shall be issued as an addendum to this specification.

1.7.6 Design of GDP's shall be performed by an entity as required in accordance with existing local code requirements or established local practices. This design work may be performed by a licensed professional engineer, a certified Hubbell Power Systems, Inc. Certified Contractor, or designer depending upon local requirements or practices.

1.7.7 When any pile exceeds the installation tolerances specified in Section 1.6 Allowable Tolerances, the Engineer shall determine whether it shall be rejected.

1.7.8 When any pile has been so damaged as to be, in the opinion of the Engineer, unsuitable, or otherwise does not conform with the requirements of the contract, such piles will be rejected. Rejected piles shall be cut off at an elevation as directed by the Engineer.

1.8 Design Criteria

1.8.1 GDP shall be designed to meet the specified loads and acceptance criteria as shown on the drawings. The calculations and drawings required from the Contractor or Engineer shall be submitted to the Owner for review and acceptance in accordance to Section 3.1 "Construction Submittals".

1.8.2 The allowable working load on the GDP shall not exceed the following values:

1.8.2.a For compression loads:

$P_{allowc} = (0.33 * f_c * A_{grout}) + (0.4 * f_{yshaft} * A_{shaft})$

Where:

P_{allowc} = allowable working load in compression (kip)

f_c = compressive strength of grout (ksi)

A_{grout} = area of grout (in.^{2})

f_{yshaft} = minimum yield strength of central steel shaft (ksi)

A_{shaft} = area of central steel shaft (in.^{2})

The minimum yield strength of the central steel shaft is as follows:

Type SS225: 90 ksi; Type RS: 50, 65 or 80 ksi, depending on product family. Ultimate concrete strain rate (0.003 in/in) may reduce the maximum usable strength of the central steel shaft and case below their specified yield strength.

1.8.2.b For tension loads:

$P_{allowt} = 0.5 * S_{ut}$

Where: P_{allowt} = allowable working load in tension (kip)

S_{ut} = Minimum ultimate tensile strength of central steel shaft segment (at coupling joint) (kip)

It is recommended to use the minimum ultimate tensile strengths as published by Hubbell Power Systems, Inc., which are shown in Chance® Technical Design Manual.

1.8.3 The ultimate structural capacity shall be determined as:

1.8.3.a For compression loads:

$P_{ultc} = 0.8 * (0.85 * f_c * A_{grout}) + (f_{yshaft} * A_{shaft})$

Where:

P_{ultc} = ultimate structural capacity in compression (kip)

f_c = compressive strength of grout (ksi)

Note: The additional 0.8 reduction factor applies to deep foundation members per ACI-318-19 "Building Code Requirements for Structural Concrete

A_{grout} = area of grout (in.^{2})

f_{yshaft} = minimum yield strength of central steel shaft (ksi)

A_{shaft} = area of central steel shaft (in.^{2})

The minimum yield strength of the central steel shaft is as follows:

Type SS225: 90 ksi; Type RS: 50,, 65 or 80 ksi, depending on the product family. Ultimate concrete strain rate (0.003 in/in) may reduce the maximum usable strength of the central steel shaft and case below their specified yield strength.

1.8.3.b For tension loads:

$P_{ult} = S_{ut}$

Where:

P_{ultt} = ultimate structural capacity in tension (kip)

S_{ut} = Minimum ultimate tensile strength of central steel shaft segment (at coupling joint) (kip)

It is recommended to use the minimum ultimate tensile strengths as published by Hubbell Power Systems, Inc., which are shown in the Chance® Technical Design Manual

1.8.4 Lateral Load and Bending: Where lateral or base shear loads are indicated on the plans, the bending moment from said loads shall be determined using lateral load analysis programs such as LPILE, GROUP, or equal commercially available software. The required soil parameters (c,f, g, and ks) for use with LPILE or equal shall be provided in the geotechnical reports. The Owner shall determine the allowable response to lateral loads. The combined bending and axial load factor of safety of the GDP shall be determined by the Owner. It is recommended to list below each load combination and required factor of safety for this specific project.

1.8.5 Expansive Soils: GDPs used in areas where expansive soils are present may require the use of special construction methods to mitigate possible shrink/swell effects. GDP shafts should be isolated from the concrete footing if said footing is in contact with the expansive soil.

1.8.6 Down-Drag/Negative Skin Friction: GDPs used in areas where compressible or decomposing soils overlie bearing stratum, or where expansive or frozen soils can cause pile jacking, GDP shafts should be provided with a no-bond zone along a specified

length to prevent load transfer that may adversely affect pile capacity. Alternately, GDP's can be provided with sufficient axial load capacity to resist down-drag/negative skin friction forces.

1.8.7 **The GDP attachment** (pile cap) shall distribute the Design Load (DL) to the concrete foundation such that the concrete bearing stress does not exceed those in the ACI Building Code and the stresses in the steel plates/welds does not exceed AISC allowable stresses for steel members.

1.8.8 **The GDP capacity** in soil (in skin friction) shall not be relied upon from the following soil layers as defined in the geotechnical reports:

_____

_____

_____

The overall length and grout take of an GDP shall be specified such that the required in-soil capacity is developed by skin friction between grout and soil over a suitable length. Screw displacement piles are elements which develop significant capacity by skin friction. Note that GDP are not suited for solid, competent rock. It is recommended that GDPs be installed to a specified minimum depth with a minimum grout take to ensure GDP capacity. Appropriate and repeatable installation techniques and pile termination criteria must be identified and verified in the field.

1.8.9 Corrosion Protection:

This section is optional (see below). Provisions of this section and Section 4.9 below may not be required in the Specification. If this section is not used, then Section 4.9 should likewise be deleted. The degree and extent of corrosion protection must be specified by the Owner (Table-1). Corrosion protection is a function of structure type, service life, loading condition, and the overall aggressiveness of the project soils. GroutForce Piles are typically provided non-galvanized. The need for corrosion protection of GDP's subjected to tension loads must be carefully determined and specified as necessary. Corrosion resistant coatings (i.e. epoxy, plastic sheath) on the lead section and extension displacement devices are impractical due to abrasive action wearing off the coating as the soil flows over the displacement devices and around the central steel shaft. Hot-dip galvanization is the only practical means to provide a corrosion resistant coating capable of withstanding the rigors of installation. Extension sections can be hot-dip galvanized, but other coatings can be specified.

The following requirements are typical. The specifier should review and edit as appropriate for the project.

Structure Type: _____ *(e.g. temporary, permanent) with a temporary structure being defined within a specified time frame (i.e. months rather than years). In general, permanent structures have a service life greater than 24 months.*

Temporary structures do not require corrosion protection.

Service Life: _____*(years) a typical service life of 75 years should be used unless otherwise specified. If the service life of a temporary GDP is likely to be extended due to construction delays, it should be considered permanent.*

Corrosion protection requirements for the various GDP elements shall be provided meeting the requirements of Table-2 for:

Loading Type: _____ *to be filled in by the Specifier with optional location limits defined (e.g. Tension, Compression, or both).*

Soil: _____ *Aggressive or Non-Aggressive with optional location and elevation limits defined by the Specifier. For guidance on aggressiveness classification, see Table A in the Appendix. It is recommended to retain the services of a corrosion design professional for very aggressive soils.*

NOTES:
Lettered items are options.
For guidance on aggressiveness classification, see Table A of the Appendix.

1. *Sustained tension or temporary tension (wind, seismic, impact) on life critical structural. For temporary tension on normal structures, corrosion protection under Compression is often used.*
2. *Corrosion protection shall extend 10'-0 below corrosive material.*
3. *Minimum 1" in soil. If protective coatings (galvanization, epoxy) are provided in compression, minimum cover may be 0.25" in soil.*

1.9. Ground Conditions

The Geotechnical Report, including logs of soil borings as shown on the boring location plan, shall be considered representative of the in-situ subsurface conditions likely to be encountered on the project site. Said Geotechnical Report shall be used as the basis for GDP design using generally accepted engineering judgment and methods.

Table-2. Corrosion Protection

LOADING	TENSION[1]		COMPRESSION	
Soil	**Aggressive[2]**	**Non-Agressive**	**Aggressive[2]**	**Non-Agressive**
CENTRAL STEEL SHAFT (All Sections)	a. Grout[3] OR b. Galvanization OR c. Minimum 1/8" corrosion loss on outside	a. Grout[3] and Bare steel OR b. Galvanization OR c. Minimum 1/8" corrosion loss on outside	a. Grout[3] OR b. Galvanization OR c. Minimum 1/8" corrosion loss on outside	a. Grout[3] and Bare steel OR b. Galvanization OR c. Minimum 1/8" corrosion loss on outside

If soil borings are not available, it is suggested to install a probe helical pile at various locations on the project site. Using the well-known installed torque vs. capacity correlation of helical piles, a presumptive soil profile can be generated.

The Geotechnical Report shall be provided for the purpose of bidding. If during GDP installation, subsurface conditions of a type and location are encountered of a frequency that were not reported, inferred and/or expected at the time of preparation of the bid, the additional costs required to overcome such conditions shall be considered as extras to be paid for.

All available information related to subsurface and general site conditions should be made available to all bidders at the time of bid preparation. It is not reasonable to expect bidders to conduct supplemental site investigations at their own risk and cost prior to bidding, unless the specific contract requirements call for it (Table-1) and provide for appropriate compensation. A mandatory site visit and pre-bid meeting should be held so that the details of the project and the specifications can be thoroughly discussed. These steps will help avoid technical and contractual problems developing during the execution of the work and will help all parties manage their respective risk.

2 REFERENCED CODES AND STANDARDS

Standards listed by reference, including revisions by issuing authority, form a part of this specification section to the extent indicated. Standards listed are identified by issuing authority, authority abbreviation, designation number, title, or other designation established by issuing authority. Standards subsequently referenced herein are referred to by issuing authority abbreviation and standard designation. In case of conflict, the particular requirements of this specification shall prevail. The latest publication as of the issue of this specification shall govern, unless indicated otherwise.

2.1 American Society for Testing and Materials (ASTM):

2.1.1 ASTM A29/A29M Steel Bars, Carbon and Alloy, Hot-Wrought and Cold Finished.

2.1.2 ASTM A36/A36M Structural Steel.

2.1.3 ASTM A53 Pipe, Steel, Black and Hot-Dipped, Zinc-Coated Welded and Seamless.

2.1.4 ASTM A193/A193M Alloy-Steel and Stainless-Steel Bolting Materials for High Temperature Service.

2.1.5 ASTM A252 Welded and Seamless Steel Pipe Piles.

2.1.6 ASTM A500 Cold-Formed Welded and Seamless Carbon Steel HSS Structural Tubing in Rounds and Shapes.

2.1.7 ASTM A572 HSLA Columbium-Vanadium Steels of Structural Quality.

2.1.8 ASTM A618 Hot-Formed Welded and Seamless High-Strength Low-Alloy Structural Tubing.

2.1.9 ASTM A656 Hot-Rolled Structural Steel, High-Strength Low-Alloy Plate with Improved Formability.

2.1.10 ASTM A1018 Steel, Sheet and Strip, Heavy Thickness Coils, Hot Rolled, Carbon, Structural, High-Strength, Low-Alloy, Columbium or Vanadium, and High-Strength Low-Alloy with Improved Formability.

2.1.11 ASTM C33 Concrete Aggregates.

2.1.12 ASTM C109 Compressive Strength of Hydraulic Cement Mortar.

2.1.13 ASTM C150 Portland Cement.

2.1.14 ASTM C494 Chemical Admixtures for Concrete.

2.1.15 ASTM C618 Coal Fly Ash and Raw or Calcined Natural Pozzolan for Use as a Mineral Admixture in Concrete

2.1.16 ASTM C1240 Silica Fume for Use as a Mineral Admixture in Hydraulic-Cement Concrete, Mortar, and Grout

2.1.17 ASTM C1107 Packaged Dry, Hydraulic-Cement Grout (Nonshrink)

2.1.18 ASTM D1143 Method of Testing Piles Under Static Axial Compressive Load.

2.1.19 ASTM D3689 Method of Testing Individual Piles Under Static Axial Tensile Load.

2.1.20 ASTM D3966 Standard Test Method for Piles Under Lateral Load.

2.2 American Welding Society (AWS):

2.2.1 AWS D1.1 Structural Welding Code – Steel.

2.3 American Society of Civil Engineers (ASCE):

2.3.1 ASCE 20-96 Standard Guidelines for the Design and Installation of Pile Foundations.

2.4 Deep Foundations Institute (DFI):

2.4.1 *Guide to Drafting a Specification for High Capacity Drilled and Grouted Micropiles for Structural Support*, 1st Edition,
Copyright 2001 by the Deep Foundation Institute (DFI).

2.5 Post Tensioning Institute (PTI):

2.5.1 *Recommendations for Prestressed Rock and Soil Anchors*, Third Edition, Copyright 1996 By the Post-Tensioning Institute.

2.6 Society of Automotive Engineers (SAE):

2.6.1 SAE J429 Mechanical and Material Requirements for Externally Threaded Fasteners.

3 SUBMITTALS

3.1 Construction Submittals

3.1.1 The Contractor or Engineer shall prepare and submit to the Owner, for review and approval, working drawings and design calculations for the GDP foundation intended for use at least 14 calendar days prior to planned start of construction (but note also Paragraph 3.1.9). All submittals shall be signed and sealed by a Registered Professional Engineer currently licensed in the State/Province of .

3.1.2 The Contractor shall submit a detailed description of the construction procedures proposed for use to the Owner for review. This shall include a list of major equipment to be used.

3.1.3 The Working Drawings shall include the following:

3.1.3.a GDP number, location and pattern by as-signed identification number

3.1.3.b GDP design load

3.1.3.c Type and size of central steel shaft

Type SS225 – 2-1/4" RCS, Type RS – 4-1/2" OD pipe, Type RS – 6-5/8"" OD pipe.

3.1.3.d Minimum depth
3.1.3.e Displacement devices and their location
3.1.3.f Inclination of GDP
3.1.3.g Grout column length
3.1.3.h Grout column diameter(s)
3.1.3.i Cut-off elevation
3.1.3.j GDP attachment to structure relative to grade beam, column pad, etc.

3.1.4 The Contractor shall submit shop drawings for all GDP components, including pile top attachment to the Owner for review and approval. This includes GDP lead and extension displacement assembly identification (manufacturer's catalog numbers). Shop drawings for GDP components, including pile top attachments, can be obtained from Hubbell Power Systems, Inc. (HPS), their certified Distributors, or directly from the HPS' website, www.chancefoundationsolutions.com

3.1.5 If required, the Contractor shall submit certified mill test reports for the central steel shaft, as the material is delivered, to the Owner for record purposes. The ultimate strength, yield strength, % elongation, and chemistry composition shall be provided.

3.1.6 The Contractor shall submit the grout materials to be used, and the means for mixing and placing the grout to the Owner for approval. This submittal shall include technical data that is representative of typical values.

3.1.7 The Contractor shall submit methods and equipment for accurately monitoring and recording the grout depth and grout volume as the pile is being installed.

3.1.8 The Contractor shall submit a plan describing how excess waste grout will be controlled and disposed of.

Technical data for grout materials is available from the manufacturer. Typical properties provided are compressive strength, density, flow, expansion/shrinkage, working time, and yield. Grout used for GDP typically contains Portland cement, silica fume and other additives.

3.1.9 The Contractor shall submit plans for pre-production (optional) and production testing for the GDPs to the Owner for review and acceptance prior to beginning load tests. The purpose of the test is to determine the load versus displacement response of the GDP and provide an estimation of ultimate capacity.

It is the responsibility of the structural engineer of record to establish acceptance criteria for GDP verification load tests, which can be incorporated into the project specific specification. Load testing also provides the means to determine the ultimate capacity vs. the grout take per foot of depth of the GDP for a specific project site.

3.1.10 The Contractor shall submit to the Owner copies of calibration reports for each torque indicator and all load test equipment to be used on the project. The calibration tests shall have been performed within one year of the date submitted. GDP installation and testing shall not proceed until the Owner has received the calibration reports. These calibration reports shall include, but are not limited to, the following information:

3.1.10.a Name of project and Contractor
3.1.10.b Name of testing agency
3.1.10.c Identification (serial number) of device calibrated
3.1.10.d Description of calibrated testing equipment
3.1.10.e Date of calibration
3.1.10.f Calibration data - Load test equipment includes load cylinders, pressure gauges, and load transducers.

3.1.11 Work shall not begin until all the submittals have been received and approved by the Owner. The Contractor shall allow the Owner a reasonable time to review, comment, and return the submittal package after a complete set has been received. All costs associated with incomplete or unacceptable submittals shall be the responsibility of the Contractor.

3.2 Installation Records (see Appendix D of Chance® Technical Design Manual Edition 5 for sample Installation Log)

The Contractor shall provide the Owner copies of GDP installation records within 24 hours after each installation is completed. Records shall be prepared in accordance with the specified division of responsibilities as noted in Table-1. Formal copies shall be submitted on a weekly basis. These installation records shall include, but are not limited to, the following information:

3.2.1 Name of project and Contractor
3.2.2 Name of Contractor's supervisor during installation
3.2.3 Date and time of installation
3.2.4 Name and model of installation equipment
3.2.5 Type of torque indicator used
3.2.6 Location of GDP by assigned identification number
3.2.7 Actual GDP type and configuration – including lead section, number and type of extension sections, and number, type, and size of displacement devices (manufacturer's SKU numbers)
3.2.8 GDP installation duration and observations
3.2.9 Total length of installed GDP
3.2.10 Cut-off elevation
3.2.11 Inclination of GDP
3.2.12 Grout quantities on a per section basis
3.2.13 Actual grout column diameter and length
3.2.14 Comments pertaining to interruptions, obstructions, or other relevant information
3.2.15 Rated load capacities

3.3 Test Reports (see Appendix D of Chance® Technical Design Manual for sample test report form)

The Contractor shall provide the Owner copies of field test reports within 24 hours after completion of the load tests. Records shall be prepared in accordance with the specified division of responsibilities as noted in Table-1. Formal copies shall be submitted within a reasonable amount of time following test completion. These test reports shall include, but are not limited to, the following information (note Section 6 – Pile Load Tests):

3.3.1 Name of project and Contractor
3.3.2 Name of Contractor's supervisor during installation
3.3.3 Name of third-party test agency, if required
3.3.4 Date, time, and duration of test
3.3.5 Location of GDP by assigned identification number
3.3.6 Type of test (e.g. tension or compression)
3.3.7 Description of calibrated testing equipment and test set-up
3.3.8 Actual GDP type and configuration – including lead section, number and type of extension sections, and number, type, and size of displacement devices (manufacturer's SKU numbers)
3.3.9 Steps and duration of each load increment
3.3.10 Cumulative pile-head movement at each load step
3.3.11 Comments pertaining to test procedure, equipment adjustments, or other relevant information
3.3.12 Signed by third party test agency rep., registered professional engineer, or as required by local jurisdiction

3.4 Closeout Submittals

3.4.1 Warranty: Warranty documents specified herein

3.4.1.a Project Warranty: Refer to Conditions of the Contract for project warranty provisions

Coordinate the warranty period stated herein with the project warranty as stated in the Contract documents.

Warranty Period: (Specify Term) years commencing on date of Substantial Completion.

3.4.1.b Manufacturer's Warranty: Submit, for Owner's Acceptance, manufacturer's standard warranty document executed by authorized company official. Manufacturer's warranty is in addition to, and not a limitation of, other rights the Owner may have under Contract Document.

4 PRODUCTS AND MATERIALS

4.1 Central Steel Shaft:

The central steel shaft, consisting of lead sections, displacement extensions, and plain extensions, shall be Type SS or RS as manufactured by the Hubbell Power Systems, Inc. (Centralia, MO).

4.1.1 ***SS225 2-1/4" material:*** Shall be hot rolled Round-Cornered-Square (RCS) solid steel bars meeting the dimensional and workmanship requirements of ASTM A29. The bar shall be High Strength Low Alloy (HSLA), low to medium carbon steel grade with improved strength due to fine grain size.

4.1.1.a Torsional strength rating: SS225 = 21,000 ft-lb
4.1.1.b Minimum yield strength = 90 ksi

4.1.2 ***RS 4-1/2" OD material:*** Shall be structural steel tube or pipe, seamless or straight-seam welded, per ASTM A53, A252, ASTM A500, or ASTM A618. Wall thickness is 0.337" (schedule 80).

4.1.2.a Torsional strength rating = 25,000 ft-lb
4.1.2.b Minimum yield strength = 50 ksi

4.1.3 ***RS 6-5/8" OD material:*** Shall be structural steel tube or pipe, seamless or straight-seam welded, per ASTM A53, A252, ASTM A500, or ASTM A618. Wall thickness is 0.280" (schedule 40).

4.1.3.a Torsional strength rating = 40,000 ft-lb
4.1.3.b Minimum yield strength = 50 ksi

4.2 Bolts:

The size and type of bolts used to connect the central steel shaft sections together shall conform to the following ASTM specifications:

4.2.1 ***SS225 2-1/4" material:*** 1-1/4" diameter bolt per ASTM A193 Grade B7.
4.2.2 ***RS 4-1/2" OD material:*** 1" diameter bolts (2 per socket coupling) per SAE J429 Grade 5.
4.2.3 ***RS 6-5/8" OD material:*** 1" diameter bolts (4 per plate coupling) per SAE J429 Grade 5.

4.3 Couplings:

Shall be formed as integral part of the extension material for all Type SS and RS 4-1/2" OD. SS225 couplings shall be hot upset forged sockets. For Type RS 4-1/2" OD material, the couplings shall be cold upset expanded end sockets. For RS6625.280 the couplings shall be welded plate connections.

4.4 Plates, Shapes, or Pier Caps:

Structural steel plates and shapes for GDP top attachments/pile caps shall conform to ASTM A36 or ASTM A572 Grade 50.

4.5 Water

Water for mixing grout shall be potable, clean and free from impurities, which may be detrimental to grout or steel. Potable water shall be available in quantities sufficient to mix grout and for equipment clean-up.

4.6 Cement

Cement for GDP grout shall be Portland cement conforming to ASTM C150 Type I or Type II. Pre-packaged, non-shrink cement grouts shall be subject to the review and acceptance of the Owner and shall conform to the requirements of ASTM C1107.

4.7 Admixtures

Admixtures are generally not required for GDP grouts. However, project specific soil conditions and loads may require high performance grout properties attainable with admixtures. For example, silica fume resists segregation and washout by improving bond between the cement particles. Its small particle size and shape improves flowability and reduces porosity – which leads to durable, high strength grout with increased chemical and electrical resistance. Fly ash improves pumpability, improves compressive strength, and reduces grout cost.

Chemical admixtures for grout shall conform to the requirements of ASTM C494. Chemical admixtures which control bleed water, improve consistency, reduce water/cement ratio, and retard set may be used in the grout subject to the review and acceptance of the Owner. Expansive admixtures can be used to fill confined areas of the central steel shaft coupling joints, or to compensate for drying shrinkage. Accelerators shall not be permitted. Chemical admixtures, if used, shall be compatible with the central steel shaft and mixed in accordance with the grout manufacturer's recommendations.

Mineral admixtures for grout shall conform to the requirements of ASTM C618 (coal fly ash) or C1240 (silica fume). Mineral admixtures, which provide thixotropic consistency, reduce porosity, increase compressive strength, and resist segregation may be used in the grout subject to the review and acceptance of the Owner. Mineral admixtures, if used, shall be compatible with the central steel shaft and mixed in accordance with the grout manufacturer's recommendations.

Grout specimen testing is generally not required for production piles, but is required for pre-production tests to evaluate the quality and strength of the grout mix. If required, a strength test shall be the average of the strength of two specimens made from the same sample of grout as used for production GDPs and tested at 28 days or at the test age designated for determination of compressive strength. The specimens shall be made and cured under field conditions in accordance with ASTM C31 and tested in accordance with ASTM C39.

4.8 Aggregate

Sand fillers may be used in the grout mix as an extender with grout columns, subject to the approval of the Owner. Use fine sand only. Medium or coarse sand shall not be permitted.

4.9 Corrosion Protection (Optional)

The corrosion protection requirements, if any, are identified in Section 1.8.9. The Specifier may elect to delete this section entirely if no corrosion protection materials are required such as for compression piles in non-aggressive ground.

4.9.1 Galvanization: If used, all Type SS material shall be hot-dipped galvanized in accordance with ASTM A153 after fabrication. All Type RS material shall be hot-dipped galvanized in accordance with ASTM A123 after fabrication.

5 EXECUTION

5.1 Site Conditions

5.1.1 Prior to commencing GDP installation, the Contractor shall inspect the work of all other trades and verify that all said work is completed to the point where GDPs may commence without restriction.

5.1.2 The Contractor shall verify that all GDPs may be installed in accordance with all pertinent codes and regulations regarding such items as underground obstructions, right-of-way limitations, utilities, etc.

5.1.3 In the event of a discrepancy, the Contractor shall notify the Owner. The Contractor shall not proceed with GDP installation in areas of discrepancies until said discrepancies have been resolved. All costs associated with unresolved discrepancies shall be the responsibility of the Owner.

5.2 Installation Equipment

5.2.1 Shall be rotary type, hydraulic power driven torque motor with clockwise and counter-clockwise rotation capabilities. The torque motor shall be capable of continuous adjustment to revolutions per minute (RPM's) during installation. Percussion drilling equipment shall not be permitted. The torque motor shall have torque capacity 15% greater than the torsional strength rating of the central steel shaft to be installed. GDP should be installed with high torque, low RPM torque motors.

5.2.2 Equipment shall be capable of applying adequate down pressure (crowd) and torque simultaneously to suit project soil conditions and load requirements. The equipment shall be capable of continuous position adjustment to maintain proper GDP alignment.

5.3 Installation Tooling

5.3.1 Shall consist of a Kelly Bar Adapter (KBA) and Type SS or RS drive tool as manufactured by Hubbell Power Systems, Inc. and used in accordance with the manufacturer's written installation instructions.

Installation tooling should be maintained in good working order and safe to operate at all times. Flange bolts and nuts should be regularly inspected for proper tightening torque. Bolts, connecting pins, and retainers should be periodically inspected for wear and/or damage and replaced with identical items provided by the manufacturer. Heed all warning labels. Worn or damaged tooling should be replaced.

5.3.2 A torque indicator shall be used during GDP installation. The torque indicator can be an integral part of the installation equipment or externally mounted in-line with the installation tooling. Torque indicators are available from Hubbell Power Systems, Inc.

Torque monitoring is purely informational as a resource to engineering and installation contractor and to ensure the torsional strength rating of the central steel shaft is not exceeded. All design capacities are derived from engineering calculations and verified by load testing.

5.3.2.a Shall be capable of providing continuous measurement of applied torque throughout the installation.

5.3.2.b Shall be capable of torque measurements in increments of at least 500 ft-lb.

5.3.2.c Shall be calibrated prior to pre-production testing or start of work. Torque indicators, which are an integral part of the installation equipment, shall be calibrated on-site. Torque indicators which are mounted in-line with the installation tooling, shall be calibrated either on-site or at an appropriately equipped test facility. Indicators that measure torque as a function of hydraulic pressure shall be calibrated at normal operating temperatures.

5.3.2.d Shall be re-calibrated, if in the opinion of the Owner and/or Contractor reasonable doubt exists as to the accuracy of the torque measurements.

5.4 Installation Procedures

5.4.1 Central Steel Shaft:

5.4.1.a The GDP installation technique shall be such that it is consistent with the geotechnical, logistical, environmental, and load carrying conditions of the project.

5.4.1.b The lead section shall be positioned at the location as shown on the working drawings.

Battered GDPs can be positioned perpendicular to the ground to assist in initial advancement into the soil before the required batter angle shall be established. The GDP sections shall be engaged and advanced into the soil in a smooth, continuous manner at a rate of rotation of 5 to 20 RPM's. Extension sections shall be provided to obtain the required minimum overall length as shown on the working drawings. Connect sections together using coupling bolt and nut torqued to 40 ft-lb.

5.4.1.c Sufficient down pressure shall be applied to uniformly advance the GDP sections. The rate of rotation and magnitude of down pressure shall be adjusted for different soil conditions and depths.

5.4.1.d Prior to start of installation, the pile sections shall be marked in regular increments so that the penetration rate of the pile and the volume of grout can be monitored.

5.4.2 Grout

5.4.2.a Grout shall be mixed with equipment capable of providing a steady supply at the required level of production. The water – cement ratio for neat cement grouts is typically between 0.4 and 0.5. When using a pre-packaged grout, the recommended water-cement ratios listed in the mixing instructions on the package shall be followed.

Typical water-cement ratio for pre-mixed microsil grouts is 0.2-0.3. Over-watering will result in reduced compressive strengths, increased shrinkage, and reduced physical properties. Best results are obtained when the grout is mixed with colloidal or high shear mixers, which provide complete wetting of the cement particles.

5.4.2.b The grout shall be placed via a gravity fed reservoir located at the surface. The reservoir shall consist of a temporary casing or form, which is capable of containing liquid grout. The reservoir shall be appropriately sized (diameter and length) to accommodate the soil conditions and grout column diameter. The grout shall be placed in the reservoir immediately prior to the advancement of the lead displacement assembly into the soil. The volume of grout contained in the reservoir shall be maintained at a level sufficient to maintain positive hydrostatic pressure on the grout column.

5.4.2.c Displacement plates shall be added at each coupling of plain extension material to act as a shaft centralizer.

5.4.2.d Grout placement shall continue until the minimum grout column length has been achieved as shown on the working drawings. Volume measurements shall be taken throughout the installation to determine the actual grout column diameter.

5.4.2.e Grout shall be allowed to attain the minimum design strength prior to being loaded. The time to reach design strength will vary depending on the grout manufacturer or the addition of high early strength additives. Grout mixes and/or additives shall be used in accordance with the manufacturer's written instructions.

5.5 Termination Criteria

It is generally not recommended to re-use GDP shaft material after it has been permanently twisted during a previous installation.

5.5.1 The torque as measured during the installation shall not exceed the torsional strength rating of the central steel shaft.

5.5.2 The minimum overall length criteria as shown on the working drawings shall be satisfied prior to terminating the GDP.

5.5.3 If the torsional strength rating of the central steel shaft and/or installation equipment has been reached prior to achieving the minimum overall length required, the Contractor shall have the following options:

5.5.3.a Terminate the installation at the depth obtained subject to the review and acceptance of the Owner, or:

5.5.3.b Remove the existing GDP and install a new one with fewer and/or smaller diameter displacement devices. The new configuration shall be subject to review and acceptance of the Owner.

It is generally not recommended to re-use GDP shaft material after it has been permanently twisted during a previous installation.

5.5.4 If the minimum grout column diameter, as shown on the working drawings, is not achieved along the minimum overall pile length, the Contractor shall have the following options:

5.5.4.a De-rate the load capacity of the GDP and install additional pile(s). The de-rated capacity and additional pile location shall be subject to the review and acceptance of the Owner.

5.5.5 If the GDP is refused or deflected by a subsurface obstruction such as cobbles, boulders, concrete ledge, metal, timbers or other debris that causes the rate of penetration to be reduced to less than 6 inches per minute, the pile shall be completed to the depth of the obstruction material in accordance with these specifications. If required by the Engineer, one or more additional adjacent piles shall be installed.

5.5.6 All piles shall be cut off to true planes at the elevation shown on the project Plans.

5.6 Connecting GDP to the Structure

5.6.1 Connect the GDP to the structure using an approved Chance® manufactured steel adapter or pile cap capable of safely transferring the structural loads to the pile. This should be accomplished immediately after installation is completed.

6 CHANCE GROUTFORCE™ LOAD TESTS

6.1 Pre-Production Pile Tests (Optional)

Load tests shall be performed to verify the suitability and capacity of the proposed GDP, and the proposed installation procedures prior to installation of production piles. ___ (state number) ___ of sacrificial test piles with reaction anchors shall be constructed immediately prior to the start of work on the production GDPs. The Owner shall determine the number of pre-production test piles, their location, acceptable load and movement criteria, and the type(s) of load direction (i.e., tension,

compression, or both). Additional purpose of pre-production tests is to empirically verify the ultimate capacity foundation for the project site. Pre-production pile installation methods, procedures, equipment, and overall length shall be identical to the production piles to the extent practical except where approved otherwise by the Owner. The Contractor shall submit for review and acceptance the proposed GDP load testing procedure. The preproduction test proposal shall be in general conformance with ASTM D1143 and/or D-3689, and shall provide the minimum following information:

- Type and accuracy of load equipment
- Type and accuracy of load measuring equipment
- Type and accuracy of pile-head deflection equipment
- General description of load reaction system, including description of reaction anchors
- Calibration report for complete load equipment, including hydraulic jack, pump, pressure gauge, hoses, and fittings.

The following test procedure shall be considered to meet the minimum requirements. It is not intended to preclude local building codes, which may mandate other requirements, such as full 24-hour load tests.

If the pre-production test fails to meet the design requirements, the Contractor shall modify the GDP design and/or installation methods and retest the modified pile, as directed by the Owner. For prescriptive specifications, the Engineer will define the appropriate modifications.

6.2 Load Test Procedures

The hydraulic jack shall be positioned at the beginning of the test such that the unloading and repositioning of the jack during the test shall not be required. The jack shall also be positioned co-axial with respect to the pilehead so as to minimize eccentric loading. The hydraulic jack shall be capable of applying a load not less than two times the proposed design load (DL).

An Alignment Load (AL) shall be applied to the GDP prior to setting the deflection measuring equipment to zero or a reference position. The AL shall be no more than 10% of the design load (i.e., 0.1 DL). After AL is applied, the test set-up shall be inspected carefully to ensure it is safe to proceed.

Axial pile load tests shall be conducted by loading the GDP in step-wise fashion as shown in Table-3 to the extent practical. Pile-head deflection shall be recorded at the beginning of each step and after the end of the hold time. The beginning of the hold time shall be defined as the moment when the load equipment achieves the required load step.

Test loads shall be applied until continuous jacking is required to maintain the load step or until the test load increment equals 200% of the Design Load (DL) (i.e., 2.0 DL), whichever occurs first. The observation period for this last load increment shall be 10 minutes. Displacement readings shall be recorded at 1, 2, 3, 4, 5 and 10 minutes (load increment maxima only).

The applied test load shall be removed in four approximately equal decrements per the schedule in Table-3. The hold time for these load decrements shall be 1 minute, except for the last decrement, which shall be held for 5 minutes.

This cyclic loading method will permit the analyses of the total, elastic, and net movements, since they can be separated and studied. For special test piles not to be used later in service, further load cycles may be conducted to provide an estimation of the ultimate capacity.

Table-3. Steps for Pre-Production Load Testing

6.3 Acceptance Criteria for GDP Verification Load Tests

LOAD STEP	HOLD TIME (MINUTES)
AL	2.5
0.20 DL	2.5
0.40 DL	2.5
0.50 DL	2.5
0.20 DL	1.0
AL	1.0
0.40 DL	1.0
0.60 DL	2.5
0.80 DL	2.5
1.0 DL	2.5
0.5 DL	1.0
0.2 DL	1.0
AL	1.0
0.5 DL	1.0
1.0 DL	1.0
1.2 DL	2.5
1.4 DL	2.5
1.6 DL	2.5
1.8 DL	2.5
2.0 DL	10
1.5 DL	1.0
1.0 DL	1.0
0.5 DL	1.0
AL	5.0

AL = Alignment Load; DL = Design Load

Both of the following criteria must be met for approval:

1. The GDP shall sustain the compression and tension design capacities (1.0 DL) with no more than ____ (state length) ____ inches total vertical movement of the pile-head as measured relative to the top of the GDP prior to the start of testing.
2. Failure does not occur at the 2.0 DL maximum compression and tension test loads. The failure load shall be defined by one of the following definitions – whichever results in the lesser load:
   - The point at which net displacement of the GDP exceeds 0.4". Note that tension loads are limited to the nominal tensile strength of the coupling joint(s) of the central steel shaft. It is recommended to use the

minimum ultimate tensile strengths as published by Hubbell Power Systems, Inc., which are shown in the Chance® Technical Design Manual – Edition 5.

- The point at which the slope of the load versus deflection (at end of increment) curve exceeds 0.05 inches/kip.

The Contractor shall provide the Owner copies of field test reports confirming GDP configuration and construction details within 24 hours after completion of the load tests. Formal copies shall be submitted as per Section 3.3. This written documentation will either confirm the load capacity as required on the working drawings or propose changes based upon the results of the pre-production tests.

When a GDP fails to meet the acceptance criteria, modifications shall be made to the design, the construction procedures, or both. These modifications include, but are not limited to, de-rating the GDP load capacity, modifying the installation methods and equipment, increasing or decreasing the grout column diameter, increasing the grout column length, or changing the GDP material (e.g., central steel shaft, grout mix, etc.). Modifications that require changes to the structure shall have prior review and acceptance of the Owner. The cause for any modifications of design or construction procedures shall be decided in order to determine any additional cost implications.

6.4 Production Pile Testing

(This may be the only type of load test conducted, depending on project conditions.)

The Contractor shall perform proof tests on a minimum of ____ (state percentage) ____ of the total production GDPs. The piles to be tested will be selected by the Owner. At the Contractor's suggestion, but with the Owner's permission, tension tests may be performed in lieu of compression tests up to 1.00 DL for GDPs with sufficient structural tension capacity. *The requirements of Table-4 may be regarded as a minimum; however, it is not recommended to test production piles to values of up to 2.0 DL unless the pile's failure load is significantly higher than 2.0 DL. The maximum production pile test load shall be determined by the Owner. For example, ASTM D1143 stipulates testing to 2.0 DL.*

The test sequence shall be as shown in Table-4 to the extent practical.

Table-4. Steps for Production Load Testing

LOAD STEP	HOLD TIME (MINUTES)
AL	0
0.20 DL	2.5
0.40 DL	2.5
0.60 DL	2.5
0.80 DL	2.5
1.00 DL	5
0.60 DL	1
0.40 DL	1
0.20 DL	1
AL	5

AL = Alignment Load; DL = Design Load

The acceptance criteria for production piles shall be per Section 6.3 Item 1.

If a production GDP that is tested fails to meet the acceptance criteria, the Contractor shall be directed to proof test another GDP in the vicinity. For failed piles and further construction of other piles, the Contractor shall modify the design, the construction procedure, or both. These modifications include, but are not limited to, installing replacement GDPs, modifying the installation methods and equipment, increasing or decreasing the grout column diameter, increasing the grout column length, or changing the GDP material (e.g., central steel shaft, grout mix, etc.). Modifications that require changes to the structure shall have prior review and acceptance of the Owner. Any modifications of design or construction procedures shall be at the Contractor's expense.

6.5 Lateral Testing

If required, lateral load tests shall be conducted in accordance with ASTM D3966. If a production pile is to be lateral load tested, care must be taken not to cause permanent damage – which can reduce its axial load capacity. The acceptance criteria as selected by the Owner, typically expressed as a maximum total movement at a specific load, must be realistic in its magnitude so as not to potentially damage the structure. It is suggested that lateral loads be resisted through some other means, such as soil anchors, battered piles, or enlarged concrete pile caps/grade beams.

7 MEASUREMENT AND PAYMENT

GDP work can be paid for in different ways, reflecting the relative risk to be accepted by the Owner and the Contractor. However, the following items are common and standard.

Table-5. Payment

QUANTITY	DESCRIPTION	UNIT
1	Mobilization/Demobilization	Lump sum
1	Conduct pre-production test pile program of declared scope	Lump sum
	Test Production Pile	Per pile
-	Obstructions	Per hour or Force Account
As required	GDP Installation	As below

- Per Unit Length: GDPs meeting the design capacity shall be paid per lineal foot below grade.
- Per Pile: GDPs meeting the design capacity shall be paid for on a “per pile” basis (no allowance for changes in length relative to that originally bid).
- Per Pile with Add/Deduct: GDPs meeting the design capacity shall be paid for on a “per pile” basis, with a predetermined length, and an add/deduct amount per lineal foot to accommodate field changes.
- Lump Sum: The whole GDP project shall be paid for on a “lump sum” basis (no allowance for changes due to additional pile length relative to that originally bid).

END OF SPECIFICATION

APPENDIX

Table-A. Guidance of Ground Aggressiveness Classification

Soil tests may be performed to measure the aggressiveness of the soil environment, especially if field observations indicate corrosion of existing structures. The most common and simple tests are for electrical resistivity, pH, chloride, and sulfates. The designation for these tests and the critical values defining whether an aggressive soil environment exists, are as shown below. Per FHWA-RD-89-198, the ground is considered aggressive if any one of these indicators shows critical values.

Property	**Test Designation**	**Critical Values**
Resistivity	ASTM G 57 AASHTO-288	below 2,000 ohm-cm
pH	ASTM G 51 AASHTO T-289	below 5
Sulfate	ASTM D 516M ASTM D 4327	above 200 ppm
Chloride	ASTM D 512 ASTM D 4327 AASHTO T-291	above 100 ppm
Organic Content	ASTM D 512 AASHTO T-267	1% max

©Copyright 2025 Hubbell Incorporated. Because Hubbell has a policy of continuous product improvement, we reserve the right to change design and specifications without notice. Printed in the U.S.A. | TD04385E, Rev. 6/25