ICC-ES Evaluation Report

ESR-2794

Reissued May 2026

Subject to renewal May 2027

This report also contains:

- City of Chicago Supplement
- City of LA Supplement

ICC-ES Evaluation Reports are not to be construed as representing aesthetics or any other attributes not specifically addressed, nor are they to be construed as an endorsement of the subject of the report or a recommendation for its use. There is no warranty by ICC Evaluation Service, LLC, express or implied, as to any finding or other matter in this report, or as to any product covered by the report.

Copyright © 2026 ICC Evaluation Service, LLC. All rights reserved.

DIVISION: 31 00 00—EARTHWORK Section: 31 63 00—Bored Piles	REPORT HOLDER: HUBBELL POWER SYSTEMS, INC.	EVALUATION SUBJECT: CHANCE® TYPE SS5, SS175, RS2875.203, RS2875.276, RS3500, SS175/RS3500 COMBO AND RS4500 HELICAL FOUNDATION SYSTEMS	

1.0 EVALUATION SCOPE

Compliance with the following codes:

- 2024, 2021, 2018, 2015, 2012 and 2009 *International Building Code®* (IBC)
- 2024, 2021, 2018, 2015, 2012 and 2009 *International Residential Code®* (IRC)
- 2013 *Abu Dhabi International Building Code* (ADIBC)†

†The ADIBC is based on the 2009 IBC. 2009 IBC code sections referenced in this report are the same sections in the ADIBC.

Properties evaluated:

- Structural
- Geotechnical

2.0 USES

2.1 IBC:

CHANCE® Model SS5, SS175, RS2875.203, RS2875.276, RS3500, RS4500 and SS175/RS3500 Combo Helical Foundation Systems are used either to underpin foundations of existing structures or to form deep foundations for new structures; and are designed to transfer compression and tension loads from the supported structures to suitable soil bearing strata. Underpinning of existing foundations is generally achieved by attaching the helical piles to the retrofit brackets (Type A side-load brackets), which support compression loads only. Deep foundations for new construction are generally obtained by attaching the helical piles to new construction brackets (Type B direct-load brackets) that are embedded in concrete pile caps or grade beams, which support both tension and compression loads.

2.2 IRC:

Under the IRC, CHANCE® Model SS5, SS175, RS2875.203, RS2875.276, RS3500, RS4500 and SS175/RS3500 Combo Helical Foundation Systems may be used as an alternate foundation system supporting light-frame construction, exterior porch deck, elevated walkway and stairway construction and accessory structures.

3.0 DESCRIPTION

3.1 General:

The CHANCE® helical foundation systems consist of a helical pile and a bracket that allows for attachment to the supported structures. Each helical pile, consisting of a lead section and one or more extension sections, is screwed into the ground by application of torsion to a depth that conforms to project requirements for avoidance

of unsatisfactory subsurface conditions and ensures a suitable soil or bedrock bearing stratum has been reached. The bracket is then installed to connect the pile to the concrete foundation of the supported structure.

3.2 System Components:

The CHANCE® helical foundation systems include either a Model SS5, SS175, RS2875.203, RS2875.276, RS3500, RS4500 or SS175/RS3500 combo helical pile lead shaft (shaft with a helix or helices), extension shaft(s), and either a Type A side-load bracket (standard remedial repair bracket, heavy duty remedial repair bracket, and direct jack remedial repair bracket) or a Type B direct-load bracket (new construction pile cap), for attachment to concrete foundations. The material and geometric dimensions of lead section and extension(s) of Model SS5, SS175, RS2875.203, RS2875.276, RS3500 or RS4500 helical piles are the same (i.e., a model SS5 pile consists of a SS5 lead shaft and one or more SS5 extension shafts that are connected together by couplings described in Section 3.2.3). A Model SS175/RS3500 combo helical pile consists of a SS175 lead section and one or more RS3500 extension(s) which are attached together by couplings and transition adapters, described in Section 3.2.3.

3.2.1 Helical Pile Lead Sections and Extensions: The CHANCE® Model SS5, SS175, RS2875.203, RS2875.276, RS3500 and RS4500 helical pile lead sections consist of one or more (up to three for SS5 lead sections, and up to four for SS175, RS2875.203, RS2875.276, RS3500, and RS4500 lead sections) helical-shaped circular steel plates factory-welded to a central steel shaft. The depth of the helical piles in soil is typically extended by adding one or more steel shaft extensions that are mechanically connected together by integral, forged steel couplings, to form one continuous steel pile. The extensions may or may not include helical bearing plates, depending on the project specifications.

The SS5 central steel shafts of the lead section and extension sections are $1^1/_2$-inch (38.1 mm), solid, round-cornered, square (RCS) steel bars.

The SS175 central steel shafts of the lead section and extension sections are $1^3/_4$-inch (44.5 mm), solid, round-cornered, square (RCS) steel bars.

The RS2875.203 central steel shafts of the lead section and extension sections are round hollow structural steel sections, HSS2.875x0.203, having a $2^7/_8$-inch (73 mm) outside diameter and a nominal wall thickness of 0.203 inch (5.2 mm).

The RS2875.276 central steel shafts of the lead section and extension sections are round hollow structural steel sections, HSS2.875x0.276, having a $2^7/_8$-inch (73 mm) outside diameter and a nominal wall thickness of 0.276 inch (7.0 mm).

The RS3500 central steel shafts of the lead section and extension sections are round hollow structural steel sections, HSS3.500x0.300, having a $3^1/_2$-inch (88.9 mm) outside diameter and a nominal wall thickness of 0.300 inch (7.6 mm).

The RS4500 central steel shafts of the lead section and extension sections are round hollow structural steel sections, HSS4.500x0.337, having a $4^1/_2$-inch (114.3 mm) outside diameter and a nominal wall thickness of 0.337 inch (8.6 mm).

Figures 1A & 1B and Table 1 provide details for lead sections; and Figures 2A & 2B and Table 2 provide details for extension sections.

3.2.2 Helix Plates: Each circular, helical, steel bearing plate (helix) is split from the center to the outside edge with spiral edge geometry. Each helix is formed to a clockwise downward spiral with all radial sections normal to the shaft's central longitudinal axis ±3° and with a 3-inch nominal pitch. The pitch is the distance between the leading and trailing edges. The helices are fillet-welded to the pile shaft.

For SS5, RS2875.203 and RS2875.276 shafts, each helix plate is 0.375 inch (9.5 mm) thick and has an outer diameter of 8, 10, 12 or 14 inches (203, 254, 305 or 356 mm).

For SS175 shafts, each helix plate is 0.375 inch (9.5 mm) thick and has an outer diameter of 8, 10, 12 or 14 inches (203, 254, 305 or 356 mm).

For RS3500 and RS4500 shafts, each helix plate is 0.50 inch (12.7 mm) thick with an outer diameter of 8, 10,12 or 14 inches (203, 254, 305, or 356 mm).

Figures 1A & 1B, and 2A & 2B, and Tables 1 and 2, provide details.

3.2.3 Couplings: For SS5, SS175, RS2875.203, RS2875.276, RS3500 and RS4500 sections, holes are factory-drilled (holes perforated for RS2875.203 and RS4500) at each end of an extension section and at the upper end of the lead section, so as to allow the multiple shaft sections (between the lead and the extension section or between two extension sections) to be through-bolted together during the installation.

At one end of each SS5 and SS175 extension section, an upset socket is made from the RCS steel bar, which allows the upper end of the lead shaft or the other end (the end without the upset socket) of an extension section to be snug-fitted into the upset socket. For SS5 helical piles, each coupling connection includes one $^3/_4$-inch-diameter (19 mm), 3-inch-long (76.2 mm), hex-head structural bolt, and one matching hex jam nut. For SS175 helical piles, each coupling connection includes one $^7/_8$-inch-diameter (22 mm), 3.75-inch-long (95.2 mm), hex-head bolt, and one matching hex jam nut. Figures 1A and 2A, and Tables 1 and 2, provide details.

One end of each RS2875.276 and RS3500 extension section has a steel coupler that consists of a pipe sleeve, factory-welded to the end of the extension, which allows the upper end of the lead shaft or the other end of an extension section to be snug-fitted into the welded coupler. The RS2875.276 coupler sleeves are round, hollow structural steel sections, HSS3.5x0.250, measuring 7.5 inch-long (190.5 mm), and having a $3^1/_2$-inch (88.9 mm) outside diameter and a 0.25-inch (6.4 mm) nominal wall thickness. The RS3500 coupler pipe sleeve is a round, hollow structural steel section, HSS4.125x0.250, measuring 7.5 inches long (190.5 mm) and having a $4^1/_8$-inch (104.8 mm) outside diameter and a 0.25-inch (6.4 mm) nominal wall thickness. One end of each RS2875.203 extension section has a steel coupler that is forged into a round deep socket sleeve as an integral part of the plain extension material. The forged coupler is 6.5-inch (165.1 mm) long with a 0.17-inch (4.3 mm) minimum wall thickness and 3.04-inch (77.2 mm) internal diameter. One end of each RS4500 extension section has a steel coupling forged into a round deep socket sleeve as an integral part of the plain extension material. The forged coupler is 6.5 inches (165.1 mm) long with a 0.27 inch (6.86 mm) minimum wall thickness and 4.66-inch (118.36 mm) internal diameter. Holes are factory drilled at each end of an extension section and at the upper end of the lead section (holes perforated for RS2875.203 and RS4500), so as to allow multiple shaft sections to be through-bolted together during the installation. For RS2875.203 and RS2875.276 helical piles, each coupling connection includes two $^3/_4$-inch-diameter (19 mm), $4^1/_4$-inch-long (108 mm), standard hex-head structural bolts, and two matching hex nuts. For RS3500 helical piles, each coupling connection includes two $^3/_4$-inch-diameter (19 mm), $5^1/_4$-inch-long (133.4 mm), standard hex-head structural bolts, and two matching hex nuts. For RS4500 helical piles, each coupling connection includes two 1-inch-diameter (25.4 mm), 6-inch-long (152.4 mm), standard hex-head structural bolts, and two matching hex nuts. See Figures 1B and 2B and Table 2 for details.

For the SS175/RS3500 combo pile, the connection between SS175 lead shaft and RS3500 extension shaft requires a C1500895 transition adapter. The connection between the SS175 lead section and the adapter is done using one $^7/_8$-inch-diameter hex-head bolt with one matching heavy hex jam nut. The connection between the adapter and the RS3500 shaft is done using two $^3/_4$-inch-diameter standard hex-head structural bolts with matching hex nuts. The adapter fits inside the coupler sleeve and outside of the SS175 shaft to facilitate a connection between a SS175 lead section and a RS3500 extension section. See Figure 10 for details. The connection between RS3500 extensions is the same as that for RS3500 piles.

3.2.4 Brackets: The CHANCE® Standard Remedial Repair Bracket assembly, Heavy Duty Remedial Repair Bracket assembly, and Direct Jack Remedial Repair Bracket assembly are side-load brackets, intended to attach helical piles that support axial compression loads only, which introduce both structure eccentricity (eccentricity between applied loading and reactions acting on the foundation structure) and bracket eccentricity (eccentricity between applied loading and reactions acting on the bracket assembly). CHANCE® New Construction Pile Caps are direct-load brackets and are for attaching to helical piles that support axial compression or axial tension loads. The different brackets are described in Sections 3.2.4.1 through 3.2.4.3.

3.2.4.1 CHANCE® Standard and Heavy Duty Remedial Repair Bracket Assemblies: The CHANCE® Standard Remedial Repair Bracket Assembly is designed for use with the CHANCE® Model SS5, SS175, RS2875.203 and RS2875.276 helical piles and is used to transfer axial compressive loading only from existing concrete foundations to the helical piles. The bracket assembly (C1500121 or C1500299) consists of a bracket subassembly; a T-Pipe (C1500486, C1500487, C1500488, C2780001, C2780002, C2788011 or C2788012); two $^7/_8$-inch-diameter (22.2 mm), 10-inch-long (254 mm), hex head, full-length threaded heavy hex bolts, with two matching $^7/_8$-inch (22.2 mm) plain washers and two matching $^7/_8$-inch (22.2 mm) heavy hex nuts; one $^5/_8$-inch-diameter (15.9 mm), $4^1/_2$-inch-long (114 mm), heavy hex bolt and one matching $^5/_8$-inch (15.9 mm) heavy hex nut for bracket assembly C1500121; and one $^3/_4$-inch-diameter (19 mm), $4^1/_2$-inch-long (114 mm)

heavy hex bolt and one matching $^3/_4$-inch (19 mm) heavy hex nut for bracket assembly C1500299. The two $^7/_8$-inch bolts, washers and nuts are used to connect the T-Pipe to the bracket subassembly, and the $^5/_8$-inch or $^3/_4$-inch bolt and nut are used to retain the T-Pipe within the two outstanding guide plates of the bracket subassembly. The installing contractor must supply two post-installed, concrete anchor bolts complying with Section 3.2.4.1.4, which are used to attach the bracket subassembly to the concrete foundations.

The CHANCE® Heavy Duty Remedial Repair Bracket Assembly is designed for use with the CHANCE® Model SS175, RS3500 and SS175/RS3500 Combo helical piles and is used to transfer axial compressive loading only from existing concrete foundations to the helical piles. The bracket assembly (C1500147) consists of a bracket subassembly; a T-Pipe (C1500474 for SS175 shaft or C1500475 for RS3500 shaft); two 1-inch-diameter (25.4 mm), 10-inch-long (254 mm), hex head, full-length threaded heavy hex bolts, with two matching 1-inch (25.4 mm) plain washers and two matching 1-inch (25.4 mm) heavy-hex nuts; and one $^7/_8$-inch-diameter (22.2 mm), $6^1/_4$-inch-long (159 mm) heavy hex bolt and one matching $^7/_8$-inch (22.2 mm) heavy hex nut. The two 1-inch (25.4 mm) bolts, washers and nuts are used to connect the T-Pipe to the bracket subassembly, and the $^7/_8$-inch (22.2 mm) bolt and nut are used to retain the pile shaft and T-Pipe within the two outstanding guide plates of the bracket subassembly. The installing contractor must supply two post-installed, concrete anchors complying with Section 3.2.4.1.5, which are used to attach the bracket subassembly to the concrete foundations.

Figures 3, 4 and 6, and Table 3, provide details for Standard and Heavy-Duty Remedial Repair Bracket Assemblies.

3.2.4.1.1 Standard Remedial Repair Bracket (C1500121 and C1500299) Subassemblies: Each bracket subassembly is constructed from one 0.31-inch-thick (7.9 mm) steel bent plate; two 0.31-inch-thick (7.9 mm) vertical gusset plates; two 0.31-inch-thick (7.9 mm) reaction angles; and one 0.50-inch-thick (12.7 mm) steel plate (pipe support arm) that are factory-welded together to form a bracket subassembly.

3.2.4.1.2 Heavy Duty Remedial Repair Bracket (C1500147) Subassembly: The bracket subassembly is constructed from one 0.50-inch-thick (12.7 mm) steel bent plate; two 0.375-inch-thick (9.5 mm) vertical gusset plates; two 0.50-inch-thick (12.7 mm) reaction angles; one 0.75-inch-thick (19.1 mm) steel plate (pipe support arm); and one 0.37-inch-thick (9.4 mm) steel plate (lateral support arm) that are factory-welded together to form a bracket subassembly.

3.2.4.1.3 T-Pipes (C1500486, C1500487, C1500474, C1500475, C1500488, C2780001, C2780002, C2788011 and C2788012) for Standard and Heavy Duty Remedial Repair Bracket Assemblies: Each T-Pipe consists of a lifting bolt plate and a support tube (or support stem) that are factory-welded together to form a T-assembly.

The C1500486 T-Pipe consists of a lifting bolt plate of square, 9.25-inch-long (235 mm), 2-inch-wide (50.8 mm), $^1/_4$-inch nominal wall thickness, hollow structural section (square HSS2×2x$^1/_4$), and a round HSS support tube, measuring 18 inches (457.2 mm) long and having a $2^5/_8$-inch (66.7 mm) outside diameter and a 0.25-inch nominal wall thickness.

The C1500487 T-Pipe consists of a lifting bolt plate of 9.25-inch-long (234.95 mm), $1^3/_4$-inch-wide (44.5 mm), solid, round-cornered, square (RCS) steel bar, and a support tube that is identical to that of the C1500486 T-Pipe.

The C1500474 T-Pipe consists of a lifting bolt plate of 11.5-inch-long (292.1 mm), 2-inch-wide (50.8 mm), solid, round-cornered, square (RCS) steel bar and a support tube of round, 34-inch-long (863.6 mm), $3^1/_4$-inch-outside-diameter (82.6 mm) and 0.375-inch nominal wall thickness tube (round HSS).

The C1500475 T-pipe consists of a lifting bolt plate that is identical to that of the C1500474 T-pipe, and a support tube of round, 18-inch-long (457.2 mm), $2^3/_4$-inch-outside-diameter (69.9 mm) and 0.188-inch (4.8 mm) nominal wall thickness tube (round HSS).

The C1500488 T-Pipe consists of a lifting bolt plate that is identical to that of the C1500487 T-Pipe, and a support tube of round, 18-inch-long (457.2 mm), $2^7/_8$-inch-outside-diameter (73.0 mm) and 0.203-inch nominal wall thickness pipe (Pipe $2^1/_2$ Std.).

The C2780001 T-pipe consists of a lifting bolt plate that is identical to that of the C1500486 T-pipe, and a support stem of 12-inch long (304.8 mm), $1^3/_4$-inch-wide (44.5 mm), solid, round-cornered, square (RCS) steel bar.

The C2780002 T-pipe consists of a lifting bolt plate that is identical to that of the C1500487 T-pipe, and a support stem of 12-inch long (304.8 mm), $1^3/_4$-inch-wide (44.5 mm) solid, round-cornered, square (RCS) steel bar.

The C2788012 T-pipe consists of a lifting bolt plate that is identical to that of the C1500486 T-pipe, and a support stem of 12-inch-long (304.8 mm), $1^1/_2$-inch-wide (38.1 mm), solid, round-cornered, square (RCS) steel bar.

The C2788011 T-pipe consists of a lifting bolt plate that is identical to that of the C1500487 T-pipe, and a support stem that is identical to that of the C2788012 T-pipe.

3.2.4.1.4 Concrete Anchors for Standard Remedial Repair Bracket Assemblies (C1500121 and C1500299): Each standard repair bracket (C1500121 or C1500299) must be installed with two $^5/_8$-inch-diameter (15.9 mm), 4-inch (101.6 mm) effective minimum embedment, Hilti KwikBolt 3 (KB3), carbon steel concrete anchors (ESR-2302) or equivalent as determined by the structural design professional, with hot-dip galvanized coating complying with ASTM A153.

3.2.4.1.5 Concrete Anchors for Heavy Duty Remedial Repair Bracket Assembly (C1500147): Each heavy-duty repair bracket (C1500147) must be installed with two $^5/_8$-inch-diameter (15.9 mm), 4-inch (101.6 mm) effective minimum embedment, Hilti KwikBolt 3 (KB3), carbon steel concrete anchors (ESR-2302) or equivalent as determined by the structural design professional, with hot-dip galvanized coating complying with ASTM A153. The two concrete anchors must be installed at the bottom row of slots for the maximum strength shown in Tables 10, 11 and 12.

3.2.4.2 CHANCE® Direct Jack Remedial Repair Bracket Assemblies (C1500738, C1500840 and C1500841): The CHANCE® Direct Jack Remedial Repair Bracket Assembly C1500738 is designed for use with the CHANCE® Model SS5 helical shaft and is used to transfer compressive loading from existing concrete foundations to the SS5 helical piles.

The CHANCE® Direct Jack Remedial Repair Bracket Assembly C1500840 is designed for use with the CHANCE® Model RS2875.203 and RS2875.276 helical shafts and is used to transfer compressive loading from existing concrete foundations to the RS2875.203 and RS2875.276 helical piles.

The CHANCE® Direct Jack Remedial Repair Bracket Assembly C1500841 is designed for use with the CHANCE® Model RS3500 helical shaft and is used to transfer compressive loading from existing concrete foundations to the RS3500 and RS175/RS3500 combo helical piles.

The bracket assemblies (C1500738, C1500840 and C1500841) consist of a bracket subassembly, a T-Pipe, and two nuts that are used to connect the bracket sub-assembly to the T-Pipe. The installing contractor must supply two concrete anchors complying with Section 3.2.4.2.4, which are used to attach the bracket sub-assembly to the concrete foundations. Figure 5 provides details.

3.2.4.2.1 Direct Jack Remedial Repair Bracket Subassembly: The bracket subassembly is constructed from one 0.375-inch-thick (9.5 mm) steel bent plate, two 0.50-inch-thick (12.7 mm) gusset plates and two 18-inch-long (457.2 mm), No. 11, all-thread reinforcing steel bars (all-thread rebars) that are factory-welded together.

3.2.4.2.2 T-Pipe for Direct Jack Remedial Repair Bracket Assembly: Each T-Pipe consists of one 12.5-inch-long (317.5 mm), 0.5-inch-thick (12.7 mm), U-shaped bent plate; one 12.5-inch-long (317.5 mm), 0.5-inch-thick (12.7 mm), 5-inch-wide (127 mm), steel bearing plate; and one round, 8-inch-long (203.2 mm), $2^5/_8$-inch-outside-diameter (66.7 mm) and 0.25-inch nominal wall thickness tube (round HSS) sleeve (for use with SS5 shafts), or one round, 8-inch-long (203.2 mm), $3^1/_2$-inch-outside-diameter (88.9 mm) and 0.216-inch (5.5 mm) nominal wall thickness tube (round HSS) sleeve (for use with RS2875.203 and RS2875.276 shafts), or one round, 8-inch-long (203.2 mm), $4^1/_2$-inch-outside-diameter (114.3 mm) and 0.337-inch (8.6 mm) nominal wall thickness tube (round HSS) sleeve (for use with RS3500 shafts) that are factory-welded together.

3.2.4.2.3 Nuts for Direct Jack Remedial Repair Bracket Assembly: The T-pipe is attached to each all-thread rebar with one proprietary matching nut.

3.2.4.2.4 Concrete Anchors for Direct Jack Remedial Repair Bracket Assembly: The installing contractor must supply two $^1/_2$-inch-diameter (12.7 mm), $3^1/_2$-inch (88.9 mm) effective minimum embedment, Hilti KwikBolt 3 (KB3), carbon steel concrete anchors (ESR-2302) or equivalent as determined by the structural design professional, with hot-dip galvanized coating complying with ASTM A153, for use in attaching the bracket to the concrete foundation.

3.2.4.3 CHANCE® New Construction Pile Caps (Brackets) (C1500458G, C1500465G, C1500459G, C1500467G, C1500781, C1500781G, C1500797, C1500797G, C1501356, C1501356G, C1501357, C1501357G, C1072726, C1072726G, C1072727, C1072727G, C1500777 C1500777G, C1500778, C1500778G, C1500793, C1500793G, C1500794, and C1500794G): The CHANCE® New Construction Pile

Caps are designed for use with the CHANCE® Model SS5, SS175, RS2875.203, RS2875.276, RS3500 and RS4500 helical shafts and for embedment in cast-in-place concrete foundations. The C1500458G, C1500465G, C1500777, C1500777G, C1500793 and C1500793G pile caps are used with the SS5 helical piles; the C1500459G, C1500467G, C1500778, C1500778G, C1500794 and C1500794G pile caps are used with the SS175 helical piles; the C1500781, C1500781G, C1500797 and C1500797G pile caps are used with the RS2875.203 and RS2875.276 helical piles; the C1501356, C1501356G, C1501357 and C1501357G pile caps are used with the RS3500 and SS175/RS3500 combo helical piles, and the C1072726, C1072726G, C1072727 and C1072727G are used with RS4500 helical piles. Each new construction pile cap consists of one cap/bearing plate and one steel tube sleeve that are factory-welded together to form the bracket. Figures 7A, 7B and 8 and Table 4 provide details.

3.2.4.3.1 C1500458G Bracket: The cap plate is $^1/_2$-inch (12.7 mm) thick and 6 inches (152 mm) square, with a $^1/_2$-inch-diameter (12.7 mm) hole located at the center of the plate. The tubular sleeve is a round, 6-inch-long (152.4 mm), $2^1/_2$-inch-outside-diameter (63.5 mm), 0.250-inch nominal wall thickness steel tube.

3.2.4.3.2 C1500465G Bracket: The cap plate and the tubular sleeve are identical to those for the C1500458G bracket, except that two 0.81-inch-diameter (20.6 mm) holes are manufactured in opposite walls of the sleeve, allowing the sleeve and the top of the shaft section (which has one hole as described in Section 3.2.3) to be through-bolted together during the field installation. The installing contractor must supply one $^3/_4$-inch-diameter (19.1 mm), heavy hex structural bolt (with threads excluded from the shear planes) along with one matching $^3/_4$-inch (19.1 mm) heavy hex nut to resist the axial tension load.

3.2.4.3.3 C1500459G Bracket: The cap plate is $^3/_4$-inch (19.1 mm) thick and 6 inches (152 mm) square, with a $^3/_4$-inch-diameter (19.1 mm) hole located at the center of the plate. The tubular sleeve is a round, 6.0-inch-long (152.4 mm), 3-inch-outside-diameter (76.0 mm), 0.313-inch nominal wall thickness steel tube.

3.2.4.3.4 C1500467G Bracket: The cap plate and the tubular sleeve are identical to those for the C1500459G bracket, except that two 1-inch-diameter (25.4 mm) holes are manufactured in opposite walls of the sleeve, allowing the bracket sleeve and the top of the shaft section (which has one hole as described in Section 3.2.3) to be through-bolted together during the field installation. The installing contractor must supply one $^7/_8$-inch-diameter (22.2 mm), heavy hex structural bolt (with threads excluded from the shear planes) along with one matching $^7/_8$-inch (22.2 mm) heavy hex nut to resist the axial tension load.

3.2.4.3.5 C1500781 and C1500781G Brackets: The cap plate for both brackets is $^1/_2$-inch (12.7 mm) thick and 7 inches (177.8 mm) square. The cap plate for the C1500781G bracket has a 1-inch-diameter (25.4 mm) hole located at the center of the plate. The tubular sleeve is a round, 6-inch-long (152.4 mm), $3^1/_2$-inch-outside-diameter (88.9 mm), 0.216-inch (5.5 mm) nominal wall thickness steel tube (round HSS). The "G" designation means the bracket is hot-dip galvanized.

3.2.4.3.6 C1500797 and C1500797G Brackets: The cap plates of C1500797 and C1500797G are identical to those of C1500781 and C1500781G, respectively. The tubular sleeve of C1500797 and C1500797G are a round, 7-inch-long (177.8 mm), $3^1/_2$-inch-outside-diameter (88.9 mm), 0.216-inch (5.5 mm) nominal wall thickness steel tube (round HSS). Two pairs of 0.81-inch-diameter (20.6 mm) holes are manufactured in opposite walls of the sleeve, allowing the bracket sleeve and the top of the shaft section (which has two pairs of holes as described in Section 3.2.3) to be through-bolted together during the field installation. Each bracket is attached to the shaft with two $^3/_4$-inch-diameter (19 mm) standard hex bolts with matching $^3/_4$-inch (19 mm) standard hex nuts. The "G" designation means the bracket is hot-dip galvanized.

3.2.4.3.7 C1501356 and C1501356G Brackets: The cap plate is $^3/_4$-inch (19 mm) thick and 8 inches (203.2 mm) square. The cap plate for the C1501356G bracket has a 1-inch-diameter (25.4 mm) hole located at the center of the plate. The tubular sleeve is a round, 6-inch-long (152.4 mm), $4^1/_2$-inch-outside-diameter (114.3 mm), 0.337-inch (8.6 mm) nominal wall thickness steel tube (round HSS). The "G" designation means the bracket is hot-dip galvanized.

3.2.4.3.8 C1501357 and C1501357G Brackets: The cap plate and the tubular sleeve of C1501357 and C1501357G are identical to those for the C1501356 and C1501356G brackets, respectively, except that three pairs of 0.81-inch-diameter (20.6 mm) holes are manufactured in opposite walls of the sleeve, allowing the bracket sleeve and the top of the shaft section (which has two pairs of holes as described in Section 3.2.3) to be through-bolted together during the field installation. The bracket is attached to the shaft with two $^3/_4$-inch-diameter (19 mm) standard hex bolts with matching $^3/_4$-inch (19 mm) standard hex nuts. The "G" designation means the bracket is hot-dip galvanized.

3.2.4.3.9 C1072726 and C1072726G Brackets: The cap plate is $^3/_4$-inch (19 mm) thick and 10 inches (254 mm) square. The cap plate has a 1.5-inch-diameter (38.1 mm) hole located at the center of the plate. The

tubular sleeve is a round, 6-inch-long (152.4 mm), $5^{9}/_{16}$-inch-outside-diameter (141.3 mm), 0.375-inch (9.5 mm) nominal wall thickness steel tube (round HSS). The "G" designation means the bracket is hot-dip galvanized.

3.2.4.3.10 C1072727 and C107 2727G Brackets: The cap plate and the tubular sleeve of C1072727 and C1072727G are identical to those for the C1072726 and C1072726G brackets, respectively, except that the tube is 7 inches (178 mm) long and that two pairs of 1.06-inch-diameter (26.9 mm) holes are manufactured in opposite walls of the sleeve, allowing the bracket sleeve and the top of the shaft section (which has two pairs of holes as described in Section 3.2.3) to be through-bolted together during the field installation. The bracket is attached to the shaft with two 1-inch-diameter (25.4 mm) standard hex bolts with matching 1-inch (25.4 mm) standard hex nuts. The "G" designation means the bracket is hot-dip galvanized.

3.2.4.3.11 C1500777 and C1500777G Brackets: The cap plate is $^{1}/_{2}$-inch (12.7 mm) thick and 7 inches (178 mm) square, with a $^{3}/_{4}$-inch-diameter (19 mm) hole located at the center of the plate (for C1500777G only). The tubular sleeve is a round, 6-inch-long (152.4 mm), $2^{3}/_{8}$-inch-outside-diameter (51 mm), 0.154-inch nominal wall thickness steel tube. The "G" designation means the bracket is hot-dip galvanized.

3.2.4.3.12 C1500793 and C1500793G Bracket: The cap plate and the tubular sleeve are identical to those for the C1500777 bracket, except that two 0.87-inch-diameter (22.1 mm) holes are manufactured in opposite walls of the sleeve, allowing the sleeve and the top of the shaft section (which has one hole as described in Section 3.2.3) to be through-bolted together during the field installation. Each bracket is attached to the shaft with one $^{3}/_{4}$-inch-diameter (19 mm) standard hex bolt with matching $^{3}/_{4}$-inch (19 mm) standard hex nut. The "G" designation means the bracket is hot-dip galvanized.

3.2.4.3.13 C1500778 and C1500778G Bracket: The cap plate is $^{1}/_{2}$-inch (12.7 mm) thick and 8 inches (203 mm) square, with a 1-inch-diameter (25.4 mm) hole located at the center of the plate (for C1500778G only). The tubular sleeve is a round, 6.0-inch-long (152.4 mm), $2^{7}/_{8}$-inch-outside-diameter (73.0 mm), 0.203-inch nominal wall thickness steel tube. The "G" designation means the bracket is hot-dip galvanized.

3.2.4.3.14 C1500794 and C1500794G Bracket: The cap plate and the tubular sleeve are identical to those for the C1500778 bracket, except that two 1-inch-diameter (25.4 mm) holes are manufactured in opposite walls of the sleeve, allowing the bracket sleeve and the top of the shaft section (which has one hole as described in Section 3.2.3) to be through-bolted together during the field installation. Each bracket is attached to the shaft with one $^{7}/_{8}$-inch-diameter (22.2 mm) standard hex bolt with matching $^{7}/_{8}$-inch (22.2 mm) standard hex nut. The "G" designation means the bracket is hot-dip galvanized.

3.3 Material Specifications:

3.3.1 Helical Pile Lead Shafts and Extensions:

3.3.1.1 Model SS5: The shaft lead and extension sections are solid, hot-rolled, RCS, carbon steel bars, conforming to a proprietary specification, and having a minimum yield strength of 70 ksi (483 MPa) and a minimum tensile strength of 100 ksi (690 MPa). The pile shafts and helix plates (where provided) are either bare steel or hot-dipped galvanized as welded assemblies in accordance with ASTM A153.

3.3.1.2 Model SS175: The shaft lead and extension sections are solid, hot-rolled, RCS, High-Strength Low-Alloy steel bars, conforming to a proprietary specification, and having a minimum yield strength of 90 ksi (621 MPa) and a minimum tensile strength of 120 ksi (827 MPa). The pile shafts and helix plates (where provided) are either bare steel or hot-dipped galvanized as welded assemblies in accordance with ASTM A153.

3.3.1.3 Model RS2875.203: The shaft lead and extension sections are carbon steel round structural tubes that conform to a proprietary specification that complies with ASTM A618 Grade III or ASTM A500, Grade C, except having a minimum yield strength of 65 ksi (448 MPa), and a minimum tensile strength of 78 ksi (538 MPa). The pile shafts and helix plates (where provided) are hot-dipped galvanized as welded assemblies in accordance with ASTM A153 and A123.

3.3.1.4 Models RS2875.276, RS3500 and RS4500: The shaft lead and extension sections are carbon steel round structural tubes that conform to a proprietary specification that complies with ASTM A618 Grade III or ASTM A500, Grade C, except having a minimum yield strength of 50 ksi (345 MPa). The pile shafts and helix plates (where provided) are hot-dipped galvanized as welded assemblies in accordance with ASTM A153 and A123.

3.3.1.5 **Model SS175/RS3500 Combo:** The shaft lead sections are the same as those for Model SS175 piles. The shaft extension sections are the same as those for Model RS3500 piles.

3.3.1.6

3.3.2 Helix Plates:

3.3.2.1 Helix Plates for Model SS5: The helix plates that have an outer diameter of 8, 10, or 12 inches (203, 254, or 305 mm) are High-Strength Low-Alloy steels, complying with a proprietary specification, and having a minimum yield strength of 50 ksi (345 MPa) and a minimum tensile strength of 65 ksi (448 MPa). The helix plates that have an outer diameter of 14 inches (356 mm) are High-Strength Low-Alloy steel, complying with a proprietary specification, and having a minimum yield strength of 50 ksi (345 MPa) and a minimum tensile strength of 65 ksi (448 MPa); or having a minimum yield strength of 80 ksi (552 MPa) and a minimum tensile strength of 90 ksi (621 MPa). The helix plates and the shafts to which they are factory-welded are either bare steel or hot-dipped galvanized as assemblies in accordance with ASTM A153.

3.3.2.2 Helix Plates for Model SS175: The helix plates are High-Strength Low-Alloy steels, complying with a proprietary specification or ASTM A656, Grade 80, and having a minimum yield strength of 80 ksi (552 MPa) and a minimum tensile strength of 90 ksi (621 MPa). The helix plates and the shafts to which they are factory-welded are either bare steel or hot-dipped galvanized as assemblies in accordance with ASTM A153.

3.3.2.3 Helix Plates for Model RS2875.203: The helix plates are High-Strength Low-Alloy steels, complying with a proprietary specification or ASTM A572 Grade 50, and having a minimum yield strength of 50 ksi (345 MPa) and a minimum tensile strength of 65 ksi (448 MPa). The helix plates and the shafts to which they are factory-welded are hot-dipped galvanized as assemblies in accordance with ASTM A123.

3.3.2.4 Helix Plates for Model RS2875.276: The helix plates are High-Strength Low-Alloy steels, complying with a proprietary specification or ASTM A656 Grade 80, and having a minimum yield strength of 80 ksi (552 MPa) and a minimum tensile strength of 90 ksi (621 MPa). The helix plates and the shafts to which they are factory-welded are hot-dipped galvanized as assemblies in accordance with ASTM A153.

3.3.2.5 Helix Plates for Model RS3500: The helix plates are High-Strength Low-Alloy steels, complying with a proprietary specification or ASTM A572 Grade 50, and having a minimum yield strength of 50 ksi (345 MPa) and a minimum tensile strength of 65 ksi (448 MPa). The helix plates and the shafts to which they are factory-welded are hot-dipped galvanized as assemblies in accordance with ASTM A153.

3.3.2.6 Helix Plates for Model RS4500: The helix plates are High-Strength Low-Alloy steels, complying with a proprietary specification or ASTM A656 Grade 80, and having a minimum yield strength of 80 ksi (552 MPa) and a minimum tensile strength of 90 ksi (621 MPa). The helix plates and the shafts to which they are factory-welded are hot-dipped galvanized as assemblies in accordance with ASTM A153.

3.3.3 Shaft Coupling:

3.3.3.1 Upset Socket for SS5 and SS175: The upset socket is an integral part (integrally forged) of the extension shaft, and it is of the same material as the extension section itself.

3.3.3.2 Pipe Sleeves for RS2875.276 and RS3500: The sleeves are carbon steel structural tubing that conforms to ASTM A513, Type 5, Grade 1020, Drawn Over a Mandrel (DOM), with a minimum yield strength of 60 ksi (414 MPa) and a minimum tensile strength of 70 ksi (483 MPa). The sleeve is hot-dipped galvanized as welded assemblies in accordance with ASTM A123.

3.3.3.3 Deep Socket Sleeve for RS2875.203 and RS4500: The deep socket sleeve is an integral part (integrally forged) of the extension shaft, and is the same material as the extension section itself.

3.3.3.4 Transition Adapter for SS175/RS3500 Combo Piles: The transition adapters are castings made of ductile iron conforming to ASTM A536, Grade 65-45-12 with a minimum yield strength of 45 ksi (310 MPa) and a minimum tensile strength of 65 ksi (448 MPa). The transition adapter is hot-dipped galvanized in accordance with ASTM A153.

3.3.3.5 Bolts and Nuts for Model SS5: The bolts used in couplings for SS5 helical pile shafts conform to ASTM A193, Grade B7 with supplementary requirement S2 Charpy Impact Test – min absorption of 20 Joules at -20°C, with threads excluded from the shear planes. The matching hex jam nuts conform to ASTM A563, Grade B. The bolts and nuts are hot-dipped galvanized in accordance with ASTM A153.

3.3.3.6 Bolts and Nuts for Model SS175: The bolts used in couplings for SS175 helical pile shafts conform to ASTM A193, Grade B7 with supplementary requirement S2 Charpy Impact Test – min absorption of 20 Joules at -20°C, with threads excluded from the shear planes. The matching heavy hex jam nuts conform to ASTM A563, Grade B. The bolts and nuts are hot-dipped galvanized in accordance with ASTM A153.

3.3.3.7 Bolts and Nuts for Models RS2875.203, RS2875.276 and RS3500: The bolts used in couplings for RS2875.203, RS2875.276 and RS3500 helical pile shafts conform to SAE J429, Grade 5, with threads excluded from the shear planes. The matching hex nuts conform to SAE J995, Grade 5. The bolts and nuts are hot-dipped galvanized in accordance with ASTM A153.

3.3.3.8 Bolt and Nuts for Model SS175/RS3500 Combo Piles with C1500895 Transition Adapters: The bolts and nuts used for connecting the C1500895 transition adapter to the RS3500 coupling sleeve are the same as the bolts and nuts for Model RS3500 described in Section 3.3.3.6. The bolt and nut used for connecting the C1500895 transition adapter to the SS175 shaft are the same as the bolt and nut for Model SS175 described in Section 3.3.3.5.

3.3.3.9 Bolts and Nuts for Models RS4500: The bolts used in couplings for RS4500 helical pile shafts conform to ASTM A193, Grade B7, with threads excluded from the shear planes. The matching hex nuts conform to ASTM A194, Grade7. The bolts and nuts are hot-dipped galvanized in accordance with ASTM A153

3.3.4 CHANCE® Standard and Heavy-Duty Remedial Repair Bracket Assemblies:

3.3.4.1 Bracket Subassemblies for Standard Remedial Repair Brackets (C1500121 and C1500299): The steel bent plates and pipe support arms conform to ASTM A36. Alternatively, the steel bent plates conform to a proprietary specification, and have a minimum yield strength of 50 ksi (345 MPa) and a minimum tensile strength of 65 ksi (448 MPa). The vertical gusset plates and reaction angles conform to a proprietary specification, and have a minimum yield strength of 50 ksi (345 MPa) and a minimum tensile strength of 65 ksi (448 MPa). The welded assembly is either bare steel or hot-dipped galvanized in accordance with ASTM A153.

3.3.4.2 Bracket Subassemblies for Heavy Duty Remedial Repair Brackets (C1500147): The components of the bracket subassembly, including the bent plate, gusset plates, reaction angles, pipe support arm and lateral support arm, conform to ASTM A36. The welded assembly is either bare steel or hot-dipped galvanized in accordance with ASTM A153.

3.3.4.3 T-Pipes for Standard and Heavy Duty Remedial Repair Bracket Assemblies: All steel components of the T-Pipes for standard and heavy-duty remedial repair bracket assemblies are hot-dipped galvanized in accordance with ASTM A153, unless otherwise specified.

For C1500486 T-Pipe, the lifting bolt plate steel conforms to ASTM A500, Grade C; the support tube steel conforms to a proprietary specification and has a minimum yield strength of 50 ksi (345 MPa) and a minimum tensile strength of 58 ksi (400 MPa). Steel components of the C1500486 T-Pipe are either bare steel or hot-dipped galvanized in accordance with ASTM A153.

For C1500487 T-Pipe, the lifting bolt plate steel conforms to a proprietary specification, and has a minimum yield strength of 90 ksi (620 MPa) and a minimum tensile strength of 120 ksi (827 MPa). The support tube steel conforms to same specification as that of support pipes of the C1500486 T-Pipe. Steel components of the C1500487 T-Pipe are either bare steel or hot-dipped galvanized in accordance with ASTM A153.

For C1500474 T-Pipe, the lifting bolt plate steel conforms to a proprietary specification, and has a minimum yield strength of 90 ksi (621 MPa) and a minimum tensile strength of 120 ksi (827 MPa). The support tube steel conforms to a proprietary specification, and has a minimum yield strength of 50 ksi (345 MPa) and a minimum tensile strength of 70 ksi (483 MPa). Steel components of the C1500474 T-Pipe are either bare steel or hot-dipped galvanized in accordance with ASTM A153.

For C1500475 T-pipe, the lifting bolt plate steel conforms to the same specification as that of lifting bolt plates of the C1500474 T-pipe. The support tube steel conforms to ASTM A513, Type 5, Grade 1020, Drawn Over a Mandrel (DOM), with a minimum yield strength of 60 ksi (414 MPa) and a minimum tensile strength of 70 ksi (483 MPa).

For C1500488 T-Pipe, the lifting bolt plate steel conforms to the same specification as that of the lifting bolt plate of C1500487 T-Pipe. The support tube steel conforms to a proprietary specification, and has a minimum yield strength of 50 ksi (345 MPa) and a minimum tensile strength of 62 ksi (427 MPa). Steel components of the C1500488 T-Pipe are either bare steel or hot-dipped galvanized in accordance with ASTM A153.

For C2780001 T-pipe, the lifting bolt plate steel conforms to ASTM A500 Grade C; the support stem steel conforms to a proprietary specification and has a minimum yield strength of 90 ksi (621 MPa) and a minimum tensile strength of 120 ksi (827 MPa).

For C2780002 T-pipe, both the lifting bolt plate and support stem steel conform to a proprietary specification, and have a minimum yield strength of 90 ksi (621 MPa) and a minimum tensile strength of 120 ksi (827 MPa).

For C2788012 T-pipe, the lifting bolt plate steel conforms to ASTM A500, Grade C; the support stem steel conforms to a proprietary specification and has a minimum yield strength of 70 ksi (483 MPa) and a minimum

tensile strength of 100 ksi (690 MPa).

For C2788011 T-pipe, the lifting bolt plate steel conforms to a proprietary specification, and has a minimum yield strength of 90 ksi (621 MPa) and a minimum tensile strength of 120 ksi (827 MPa); the support stem steel conforms to a proprietary specification and has a minimum yield strength of 70 ksi (483 MPa) and a minimum tensile strength of 100 ksi (690 MPa).

3.3.4.4 Structural Fasteners for Standard Remedial Repair Bracket Assemblies (C1500121 and C1500299): The bolts used in connecting T-Pipes to reaction angles and bridging the two vertical gusset plates conform to ASTM A325, Type 1. Threads are not excluded from shear planes of the bolt that bridges the two vertical gusset plates. The matching nuts at T-Pipe bolt plates conform to ASTM A563, Grade DH, or ASTM A194, Grade 2H. Flat circular washers conforming to ASTM F436 Type 1 are provided for use between the nuts and the T-Pipe lifting bolt plates. The matching nuts at gusset plates conform to ASTM A563, Grade DH, or ASTM A194, Grade 2H. The bolts, nuts and washers are hot-dipped galvanized in accordance with ASTM A153.

3.3.4.5 Structural Fasteners for Heavy Duty Remedial Repair Bracket Assembly (C1500147): The bolts used in connecting T-Pipes to reaction angles, and bridging the two vertical gusset plates, conform to ASTM A325, Type 1. Threads are not excluded from shear planes of the bolt that bridges the two vertical gusset plates. The matching nuts at T-Pipe lifting bolt plates conform to ASTM A563, Grade DH, or ASTM A194, Grade 2H. The matching nuts at vertical gusset plates conform to ASTM A563, Grade DH, or ASTM A194, Grade 2H. The washers provided for use between the lifting bolt plate and lifting bolt nuts conform to ASTM F436 Type 1. The bolts, nuts and washers are hot-dipped galvanized in accordance with ASTM A153.

3.3.5 CHANCE® Direct Jack Remedial Repair Bracket Assemblies (C1500738, C1500840 and C1500841)

3.3.5.1 Direct Jack Remedial Repair Bracket Sub-Assembly: The bent plate conforms to a proprietary specification, and has a minimum yield strength of 50 ksi (345 MPa) and a minimum tensile strength of 65 ksi (448 MPa). The gusset plates conform to ASTM A36. The all-thread rebar conforms to specifications set forth in the approved quality documentation. The bracket subassemblies are hot-dipped galvanized in accordance with ASTM A153, except for C1500738 Subassembly, which is either bare steel or hot-dipped galvanized in accordance with ASTM A153.

3.3.5.2 T-Pipe for Direct Jack Remedial Repair Bracket Assembly: The steel of the U-shaped bent plate and the steel bearing plate conform to a proprietary specification, and has a minimum yield strength of 50 ksi (345 MPa) and a minimum tensile strength of 65 ksi (448 MPa). The steel of the tubular sleeve conforms to a proprietary specification, and have a minimum yield strength of 50 ksi (345 MPa) and a minimum tensile strength of 62 ksi (427 MPa). The T-Pipes are hot-dipped galvanized in accordance with ASTM A153, except for the C1500738 T-Pipe, which is either bare steel or hot-dipped galvanized in accordance with ASTM A153.

3.3.5.3 Nuts for Direct Jack Remedial Repair Bracket Assembly: The hex nuts conform to a specification set forth in the approved quality documentation.

3.3.6 CHANCE® New Construction Pile Caps (Brackets):

3.3.6.1 C1500458G and C1500465G: The cap plates conform to ASTM A572, Grade 50. The tubular sleeves conform to ASTM A513, Type 5, Grade 1026, having a minimum yield strength of 70 ksi (483 MPa) and a minimum tensile strength of 80 ksi (552 MPa). The brackets are hot-dipped galvanized in accordance with ASTM A153.

3.3.6.2 C1500459G and C1500467G: The cap plates conform to ASTM A36. The tubular sleeves conform to ASTM A513, Type 5, Grade 1026, and have a minimum yield strength of 70 ksi (483 MPa) and a minimum tensile strength of 80 ksi (552 MPa). The brackets are hot-dipped galvanized in accordance with ASTM A153.

3.3.6.3 C1501356, C1501356G and C1501357, C1501357G: The cap plates conform to ASTM A572, Grade 50. The tubular sleeves conform to ASTM A500 Grade B. The “G” designation brackets are hot-dipped galvanized in accordance with ASTM A153.

3.3.6.4 C150781, C1500781G and C1500797 and C1500797G: The cap plates conform to ASTM A572, Grade 50. The tubular sleeves conform to a proprietary specification, and have a minimum yield strength of 50 ksi (345 MPa) and a minimum tensile strength of 62 ksi (427 MPa). The “G” designation brackets are hot-dipped galvanized in accordance with ASTM A153.

3.3.6.5 C1072726, C1072726G and C1072727, C1072727G: The cap plates conform to ASTM A572, Grade 50. The tubular sleeves conform to ASTM A500 Grade B. The "G" designation brackets are hot-dipped galvanized in accordance with ASTM A153.

3.3.6.6 C1500777, C1500777G: The cap plates conform to ASTM A572, Grade 50. The tubular sleeves conform to ASTM A500, Grade B. The "G" designation brackets are hot-dipped galvanized in accordance with ASTM A153.

3.3.6.7 C1500793, C1500793G: The cap plates conform to ASTM A572, Grade 50. The tubular sleeves conform to ASTM A53, Grade B. The "G" designation brackets are hot-dipped galvanized in accordance with ASTM A153.

3.3.6.8 C1500778, C1500778G and C1500794, C1500794G: The cap plates conform to ASTM A656, Grade 80. The tubular sleeves conform to ASTM A500, Grade B. The "G" designation brackets are hot-dipped galvanized in accordance with ASTM A153.

3.3.6.9 Structural Fasteners for C1500465G and C1500467G Tension Applications: The structural bolts must conform to ASTM A325, Type 1. The matching nut must conform to A 563, Grade DH, or ASTM A194, Grade 2H. The bolts and nuts must be hot-dipped galvanized in accordance with ASTM A153.

3.3.6.10 Structural Fasteners for C1501357, C1501357G, C1500797 and C1500797G Tension Applications: The bolts conform to SAE J429, Grade 5. The matching hex nuts conform to SAE J995, Grade 5. The bolts and nuts are hot-dipped galvanized in accordance with ASTM A153.

3.3.6.11 Structural Fasteners for C1072727 and C1072727G Tension Applications: The bolts conform to ASTM A193 Grade B7. The matching hex nuts conform to ASTM A194 Grade 7. The bolts and nuts are hot-dipped galvanized in accordance with ASTM A153.

3.3.6.12 Structural Fasteners for C1500793, C1500793G and C1500794, C1500794G Tension Applications: The structural bolts conform to ASTM A193 Grade B7. The matching nut must conform to ASTM A194, Grade 2 or 2H. The bolts and nuts are hot-dipped galvanized in accordance with ASTM A153.

4.0 DESIGN AND INSTALLATION

4.1 Design:

4.1.1 General: Engineering calculations (analysis and design) and drawings, prepared by a registered design professional, must be submitted to and approved by the code official for each project, and must be based on accepted engineering principles, as described in IBC Section 1604.4, and must conform to IBC Section 1810. Under the IRC, the registered design professional must design the helical pile foundation system and devices, including the bracket, used as a foundation element. The applied loads must not exceed the published capacities shown in this report for the helical pile foundation system and devices. The registered design professional may determine the design forces in accordance with IRC Section R301 or, as an alternate, in accordance with IBC provisions. The engineering analysis must address helical foundation system performance related to structural and geotechnical requirements. The calculations must address the ability (considering strength and stiffness) of the supported foundation and structure to transmit the applied loads to the helical foundation system and the ability of the helical piles and surrounding soils to support the loads applied by the supported foundation and structure. The design method for the steel components is either the Load and Resistance Factor Design (LRFD), or the Allowable Strength Design (ASD), described in IBC Section 202 and AISC 360 Section B3. The design method for the concrete components is the Strength Design (also called LRFD) described in IBC Section 202 and ACI 318. The design method for soils is the ASD prescribed in IBC Sections 202 and 1802.1 (Section 1801.2 of the 2015, 2012, and 2009 IBC).

The structural analysis must consider all applicable internal forces (axial forces, shears, bending moments and torsional moments, if applicable) due to applied loads, eccentricity between applied loads and reactions acting on the pile-supported structure, the forces/moments exerted on the concrete foundations by the CHANCE® connection brackets, and the design span(s) between helical foundations.

CHANCE® remedial repair brackets entail eccentric connection to the pile-supported structure. The effects of this eccentricity can be divided into two components: bracket eccentricity and structural eccentricity. The structural eccentricity relates to the offset distance between the applied loads and the reactions, including reactions from the brackets acting on the pile-supported structure. The bracket eccentricity is resisted by the pile shaft, the bracket, the connection between the shaft and the bracket, and the connection between the

bracket and the pile-supported structure. The effects of the bracket eccentricity have been evaluated in this report. The forces exerted by the remedial brackets on the supported structures at the brackets' allowable load ratings are described in Figure 9 and in Tables 17 through 22. The actual forces exerted on supported foundations will depend on the load actually supported by the helical pile. For loads less than a bracket's allowable load rating, the forces exerted on the supported foundations may be calculated by scaling down in proportion to the supported load.

CHANCE® new construction pile caps exert a force and in some cases may be allowed to exert a moment on the footing or grade beam in which they are embedded. The force is equal in magnitude and opposite in direction to the force in the pile. A small lateral force is developed at the pile cap embedment if the pile shaft is not perfectly plumb but within the permitted inclination from vertical of ±1°. The lateral shear is equal to sin (1°) or 0.0175 x the axial force exerted on the pile by the foundation. The allowable moment is zero for pile caps used with type SS5, type SS175, type RS2875.203 and RS2875.276, type RS3500, type RS4500 and type SS175/RS3500 combo helical piles embedded in soft soil under all conditions of concrete strength and pile head fixity.

For pile caps sufficiently embedded in concrete to provide a fixed head condition (see Figure 8) and embedded in firm soils only, the allowable moments for SS5 pile shafts with C1500458G and C1500465G pile caps (based on interaction of combined flexural and axial compression force only in the pile shaft), at the pile caps' allowable strength ratings (ASD level), are 14.20 kip-in (1603 N-m) in 2,500 psi (17.2 MPa) concrete, 13.55 kip-in (1530 N-m) in 3,000 psi (20.7 MPa) concrete and 12.27 kip-in (1385 N-m) in 4,000 psi (27.6 MPa) concrete. For SS5 pile shafts with C1500777[G] and C1500793[G] pile caps under the same conditions, the allowable moment is 12.60 kip-in (1424 N-m) for all concrete strengths.

For pile caps used with SS175 helical piles under the same fixed-head and firm-soil conditions, the allowable moments of the pile shaft (based on interaction of combined flexural and axial compression force only in the pile shaft) at the pile caps' allowable strength ratings are 36.14 kip-in (4080 N-m) in 2,500 psi (17.2MPa) concrete, 27.82 kip-in (3141 N-m) in 3,000 psi (20.7 MPa) concrete and 24.61 kip-in (2778 N-m) in 4,000 psi (27.6 MPa) concrete. For SS175 pile shafts with C1500778[G] and C1500794[G] pile caps under the same conditions, the allowable moment is 26.93 k-in. (3043 N-m) for all concrete strengths.

For pile caps used with RS3500 and SS175/RS3500 combo helical piles under the same fixed-head and firm-soil conditions, the allowable moments of the pile shaft (based on interaction of combined flexural and axial compression force only in the pile shaft) at the pile caps' allowable strength ratings are 5.17 kip-in (584 N-m) for 2,500 psi (17.2 MPa) concrete and are zero for other concrete strengths. For pile caps used with RS3500 helical piles under the same fixed-head and firm-soil conditions in Seismic Design Categories D, E or F, the allowable moments of the pile shaft at the pile caps' allowable strength (ASD level) ratings are 3.2 kip-in (362 N-m) for 2,500 psi (17.2 MPa) concrete and are zero for other concrete strengths.

For pile caps used with RS2875.276 helical piles under the same fixed-head and firm-soil conditions, the allowable moments of the pile shaft at the pile caps' allowable strength (ASD level) ratings are 16.68 kip-in (1885 N-m) for 2,500 psi (17.2 MPa) concrete and 12.57 kip-in (1420 N-m) for 3,000 psi (20.7 MPa) concrete and 4.92 kip-in (556 N-m) for 4,000 psi (27.6 MPa) concrete. For pile caps used with RS2875.276 helical piles under the same fixed-head and firm-soil conditions in Seismic Design Categories D, E or F, the allowable moments of the pile shaft at the pile caps' allowable strength (ASD level) ratings are 15.32 kip-in (1731 N-m) for 2,500 psi (17.2 MPa) concrete and 11.08 kip-in (1252 N-m) for 3,000 psi (20.7 MPa) concrete and 3.16 kip-in (357 N-m) for 4,000 psi (27.6 MPa) concrete.

For pile caps used with RS2875.203 helical piles under the same fixed-head and firm-soil conditions, the allowable moments of the pile shaft at the pile caps' allowable strength (ASD level) ratings are 14.14 kip-in (1598 N-m) for 2,500 psi (17.2 MPa) concrete and 9.86 kip-in (1114 N-m) for 3,000 psi (20.7 MPa) concrete and 9.63 kip-in (1088 N-m) for 4,000 psi (27.6 MPa) concrete. For pile caps used with RS2875.203 helical piles under the same fixed-head and firm-soil conditions in Seismic Design Categories D, E or F, the allowable moments of the pile shaft at the pile caps' allowable strength (ASD level) ratings are 12.38 kip-in (1399 N-m) for 2,500 psi (17.2 MPa) concrete and 7.92 kip-in (895 N-m) for 3,000 psi (20.7 MPa) concrete and 7.68 kip-in (868 N-m) for 4,000 psi (27.6 MPa) concrete.

For pile caps used with RS4500 helical piles under the same fixed-head and firm-soil conditions, the allowable moments of the pile shaft at the pile caps' allowable strength (ASD level) for Seismic Design Categories A, B and C ratings are 43.42 kip-in (4906 N-m) for 2,500 psi (17.2 MPa) concrete and 31.02 kip-in (3505 N-m) for 3,000 psi (20.7 MPa) concrete and 28.04 kip-in (3168 N-m) for 4,000 psi (27.6 MPa) concrete. For pile caps used with RS4500 helical piles under the same fixed-head and firm-soil conditions in Seismic

Design Categories D, E or F, the allowable moments of the pile shaft at the pile caps' allowable strength (ASD level) ratings are 41.65 kip-in (4706 N-m) for 2,500 psi (17.2 MPa) concrete and 29.09 kip-in (3287 N-m) for 3,000 psi (20.7 MPa) concrete and 26.06 kip-in (2944 N-m) for 4,000 psi (27.6 MPa) concrete.

The effects of the structural eccentricity, including the reactions (forces and moments) exerted by the bracket to the pile-supported structures, vary with application, and must be included in the structural analysis by a registered design professional. The result of this analysis and the structural capacities must be used to select a helical foundation system.

The minimum pile embedment into soil for various loading conditions must be determined based on the most stringent requirements of the following: engineering analysis; tested conditions and specified minimum pile embedment described in this report; the site-specific geotechnical investigation report; and site-specific load tests, if applicable.

The strengths (capacities) of the CHANCE® helical foundation components (bracket, shaft, helix and soil), including nominal strength, LRFD strength and ASD allowable strength, as described in IBC Section 202 and AISC 360 Section B3, are included in this evaluation report. The bracket capacities are listed in Tables 10 through 16; shaft capacities are listed in Tables 6 through 9A; helix capacities are listed in Table 5; and soil capacities are described in Section 4.1.5, below.

The geotechnical analysis must address the suitability of the helical foundation system for the specific project. It must also address the center-to-center spacing of the helical pile, considering both effects on the supported foundation and structure and group effects on the pile-soil capacity. The analysis must include estimates of the axial tension and/or compression capacities of the helical piles, whatever is relevant for the project, and the expected total and differential foundation movements due to single pile or pile group, as applicable.

A written report of the geotechnical investigation must be submitted to the code official as part of the required submittal documents, prescribed in IBC Section 107, at the time of the permit application. Under the IRC, a geotechnical investigation is not required if the helical pile foundation system and devices described in the evaluation report are being installed to support IRC structures defined in Section 2.2 of this report and the soil capacity of the helical pile system is established in accordance with Equation 5 in Section 4.1.5 of this report. The geotechnical report must include, but not be limited to, the following information:

1. A plot showing the location of the soil investigation.
2. A complete record of the soil boring and penetration test logs and soil samples.
3. A record of soil profile.
4. Information on groundwater table, frost depth and corrosion-related parameters, as described in Section 5.5 of this report.
5. Soil properties, including those affecting the design such as support conditions of the piles.
6. Soil design parameters, such as shear strength parameters as required by Section 4.1.5; soil deformation parameters; and relative pile support conditions as defined in IBC Section 1810.2.1.
7. Recommendations for design criteria, including but not limited to: mitigations of effects of differential settlement and varying soil strength; and effects of adjacent loads.
8. Field inspection and reporting procedures (to include procedures for verification of the installed bearing capacity when required).
9. Load test requirements.
10. Any questionable soil characteristics and special design provisions, as necessary.

4.1.2 Bracket Capacity (P1): For the concrete footing used with remedial repair brackets, the localized limit state of the bracket's concrete bearing and those limit states described in Chapter 17 of ACI 318-19 under the 2024 and 2021 IBC (Chapter 17 of ACI 318-14 under the 2018 and 2015 IBC, Appendix D of ACI 318-11 under the 2012 IBC, and Appendix D of ACI 318-08 under the 2009 IBC) for concrete anchors in tension (such as concrete breakout and pullout), have been evaluated in this evaluation report. The new construction pile cap loaded in tension could fail in unreinforced concrete at minimum embedment and cover. All other limit states related to the concrete foundation used with all brackets/pile caps recognized in this evaluation report, such as those limit states described in Chapter 17 of ACI 318 under the 2024, 2021, 2018, and 2015 IBC (ACI 318 Appendix D under the 2012 and 2009 IBC) for anchors in shear (such as concrete breakout and pry-out), steel cap plate bending and concrete breakout when new construction pile caps are used to resist axial tension forces, punching (two-way) shear, beam (one-way) shear, and flexural (bending) related limit states, lateral

load capacity, and all limit states related to bending moment transfer among pile shaft/new construction pile cap/and concrete footing, have not been evaluated in this evaluation report. The concrete foundation and interaction of pile shaft, new construction pile cap and concrete footing must be designed and justified to the satisfaction of the code official, with due consideration to all applicable limit states and the direction and eccentricity of applied loads, including reactions provided by the brackets, acting on the concrete foundation. Refer to Tables 10, 11, and 12 for repair bracket capacities; and Tables 13, 14, 15 and 16 for new construction pile cap capacities.

4.1.3 Shaft Capacity (P2): The top of shafts must be braced as prescribed in IBC Section 1810.2.2, and the supported foundation structures such as concrete footings and concrete pile caps are assumed to be adequately braced such that the supported foundation structures provide lateral stability for the pile systems. In accordance with IBC Section 1810.2.1, any soil other than fluid soil must be deemed to afford sufficient lateral support to prevent buckling of the systems that are braced, and the unbraced length is defined as the length of piles that is standing in air, water or in fluid soils plus an additional 5 feet (1524 mm) when embedded into firm soil or an additional 10 feet (3048 mm) when embedded into soft soil. Firm soil must be defined as any soil with a Standard Penetration Test blow count of five or greater. Soft soil must be defined as any soil with a Standard Penetration Test blow count greater than zero and less than five. Fluid soils must be defined as any soil with a Standard Penetration Test blow count of zero [weight of hammer (WOH) or weight of rods (WOR)]. Standard Penetration Test blow count must be determined in accordance with ASTM D1586. Under the IRC, when helical pile foundation shafts are fully embedded into soil conditions defined in IRC Table R401.4.1, the helical foundation system is deemed adequately supported to prevent buckling. The shaft capacity and the coupler deflection of the helical foundation systems in air, water or fluid soils is not addressed in Tables 6, 7, 8, 9 and 9A, and must be determined by a registered design professional.

For each pile, including Models SS5, SS175, RS2875.203, RS2875.276, RS3500, RS4500 and SS175/RS3500 combo pile, the shaft capacity including maximum installation torque is the lowest capacity of its components, which include a lead section, one or more extension sections, and couplings connecting lead section to extension section, or connecting two extension sections together. Additionally, for a SS175/RS3500 combo pile, the coupling connection between SS175 lead section and a RS3500 extension section includes a C1500895 transition adapter. Tables 6, 7, 8, 9 and 9A provide shaft capacities, including coupling capacities and the mechanical capacities of the C1500895 transition adapter.

For purposes of this report, shaft support conditions for resisting axial compressive loads are classified into the following two categories: (1) Fixed Condition, where the top of the pile/bracket is fully restrained against rotation and translation by the concrete foundation; (2) and Pinned Condition, where the top of the pile/bracket is fully restrained against translation, but not against rotation, by the concrete foundation. For both conditions, no portion of the pile may stand in air, water or fluid soils; the top of piles must be braced in accordance with IBC Section 1810.2.2 as noted above; and piles must be embedded at least 5 feet (1524 mm) into stiff soil, and 10 feet (3048 mm) into soft soil. See Tables 6, 7, 8, 9 and 9A for shaft capacities.

4.1.4 Helix Plate Capacity (P3): The helix compression and tension load capacities (P3) are listed in Table 5. For helical piles with more than one helix, the allowable helix capacity, P3, for the helical foundation system, may be taken as the sum of the least allowable capacity of each individual helix.

4.1.5 Soil Capacity (P4): The design axial compressive and tensile load capacities of helical piles based on soil resistance (P4) must be determined by a registered design professional in accordance with a site-specific geotechnical report, as described in Section 4.1.1, combined with the individual helix bearing method (Method 1), or from field loading tests conducted under the supervision of a registered design professional (Method 2). For either Method 1 or Method 2, the predicted axial load capacities must be confirmed during the site-specific production installation, such that the axial load capacities predicted by the torque correlation method must be equal to or greater than that predicted by Method 1 or 2, described above.

With the individual helix bearing method, the total nominal axial load capacity of the helical pile is determined as the sum of the individual areas of the helical bearing plates times the ultimate bearing capacities of the soil or rock comprising the respective bearing strata for the plates, as follows:

$$Q_{tot} = \Sigma(A_h q_u) \qquad \text{(Equation 1)}$$

where:

Q_{tot} = predicted nominal axial tensile or compressive capacity of the helical pile, lbf (N).

A_h = area of an individual helix bearing plate, in.^{2} (mm^2).

q_u = ultimate unit bearing capacity of the soil or rock comprising the bearing stratum for the individual helix bearing plate, psi (MPa).

Under the 2024 and 2021 IBC, the axial capacity is equal to the sum of the areas of the helical bearing plates times the ultimate bearing capacity of the soil or rock comprising the bearing stratum plus the shaft resistance. The shaft resistance is equal to the surface area of the shaft above the uppermost helical bearing plate times the ultimate skin friction.

The unit bearing capacity of the bearing stratum for each helix plate is calculated using the bearing capacity equation for deep foundations as follows:

$q_u = cN_c + q'N_q$ (Equation 2)

where:

c = undrained shear strength parameter, considering the effect of soil disturbance due to the helix pile installations, psi (MPa).

N_c = bearing capacity factor.

q' = effective overburden pressure at helix plate founding depth, psi (MPa).

N_q = bearing capacity factor.

The bearing capacity factors N_c and N_q and the undrained shear strength of soils must be taken from the site-specific geotechnical report.

The design allowable axial load must be determined by dividing the total ultimate axial load capacity predicted by either Method 1 or 2, above, by a safety factor of at least 2.

Under the IRC, if the helical pile system is being installed to support structures governed by the IRC, as defined in Section 2.2 of this report, and a geotechnical investigation is not available, a safety factor of 2.5 must be used with the torque correlation method in lieu of Method 1 or 2 to determine allowable soil capacity of the pile (Equation 5)

The Foundation Design Documentation (see Section 4.1.8) must include documentation of the derivation of the design allowable capacity and the minimum effective torsional resistance pile termination criterion, derived using the torque correlation method. With the torque correlation method, the total ultimate axial load capacity of the helical pile is predicted as follows:

$Q_{ult} = K_t T$ (Equation 3)

$Q_{all} = 0.5\ Q_{ult}$ (Equation 4)

$Q_{all} = 0.4\ Q_{ult}$ (Equation 5)

where:

Q_{ult} = Ultimate axial tensile or compressive capacity (lbf or N) of the helical pile, which must be limited to the following maximum values: 55.9 kips (248.6 kN) for SS5 helical piles in tension; 62.7 kips (278.9 kN) for SS175 helical piles in compression; 57.4 kips (255.3 kN) for SS175 helical piles in tension; 76.0 kips (738.06 kN) for RS2875.276 helical pile in tension.

Q_{all} = Allowable axial tensile or compressive capacity (lbf or N), which must be limited to the following maximum values: 27.9 kips (124.1 kN) for SS5 helical piles in tension; 31.4 kips (139.4 kN) for SS175 helical piles in compression; 28.7 kips (127.7 kN) for SS175 helical piles in tension; 38.0 kips (169.03 kN) for RS2875.276 helical pile in tension.

Capacity limitations for SS5 and SS175 Q_{ult} and Q_{all} described in this Section 4.1.5 are based on axial verification tests conducted on single-helix helical piles. Torque correlation predicted capacities of multi-helix helical piles above these limitations are outside the scope of this evaluation report and are subject to approval of the code official, the approval being based upon submission of justifying evidence in accordance with the code by a registered design professional.

K_t = Torque correlation factor of 10 ft^{-1} (32.8 m^{-1}) for the CHANCE® Model SS5 (1.5-inch) and SS175 (1.75-inch) square shaft piles, 9 ft^{-1} (30 m^{-1}) for Models RS2875.203 and RS2875.276 piles, 7 ft^{-1} (23 m^{-1}) for the Model RS3500 and the Model SS175/RS3500 Combo piles, and 5.5 ft^{-1} (18.0 m^{-1}) for Model RS4500.

T = Effective torsional resistance, which is defined as follows: For single-helix piles supporting axial compression loads, it is the installation torque measured when the pile reaches its final tip embedment; for all piles supporting axial tension loads and for multi-helix piles supporting axial compression loads, it is the average of the last three installation torque measurements. Such measurements must be made at 1-foot (305 mm) increments of tip embedment as the lead helix moves from a position, which is 2 feet (710 mm) prior to the final tip embedment, to the final tip embedment, in lbf-ft or N-m. The minimum effective torsional resistance pile termination criterion is calculated as:

T_{req} = F.S. x Q_{all}/K_t (Equation 5)

where:

T_{req} = minimum effective torsional resistance pile termination criterion, in lbf-ft or N-m.

F.S.= an appropriate factor of safety for the project, not less than 2.0.

The lateral soil capacity of helical piles referenced in Table 23 of this report is based on field testing of either $2^7/_8$-inch outside-diameter (Models RS2875.203 and RS2875.276) or 3.5-inch-outside-diameter (Model RS3500 and Model SS175/RS3500 Combo) and 4.5-inch-outside-diameter (Model RS4500) shafts with helix plate diameters ranging between 8-inches and 14 inches installed in a stiff clay soil with a minimum SPT blow count of 26 at a minimum embedment as indicated in Table 23. For soil conditions other than stiff clay, the lateral capacity of the pile must be designed by a registered design professional.

4.1.6 Foundation System: The overall allowable capacity of the CHANCE® helical foundation system (in tension and compression) depends upon the analysis of interaction of brackets, shafts, helical plates and soils, and must be the lowest value of P1 (bracket capacity), P2 (shaft capacity), P3 (helical bearing plate capacity) and P4 (allowable soil capacity). The overall allowable lateral capacity of the CHANCE® helical foundation system depends upon the analysis of interaction of brackets, shafts and soils, and must be the lowest value of those for bracket allowable capacity, shaft allowable capacity, and allowable soil capacity.

For all design methods permitted under Section 4.1.1 of this report, the allowable axial compressive and tensile load of the helical pile system must be based on the least of the following conditions in accordance with IBC Section 1810.3.3.1.9:

- Allowable load predicted by the individual helix bearing method (or Method 1) described in Section 4.1.5 of this report.
- Allowable load predicted by the torque correlation method described in Section 4.1.5 of this report.
- Allowable load predicted by dividing the ultimate capacity determined from load tests (Method 2 described in Section 4.1.5) by a safety factor of at least 2.0. This allowable load will be determined by a registered design professional for each site-specific condition. Under the 2024 and 2021 IBC, the load tests must comply with IBC Section 1810.3.3.1.2.
- Allowable capacities of the shaft and shaft couplings. See Section 4.1.3 of this report.
- Sum of the allowable axial capacity of helical bearing plates affixed to the pile shaft. See Section 4.1.4 of this report.
- Allowable axial load capacity of the bracket. See Section 4.1.2 of this report.

4.1.7 Settlement Analysis: The pile head vertical movement at allowable load of a CHANCE® helical pile may be estimated as the sum of the following: the movement at helix plates due to soil deformation and helix plate deflection, and the shaft elastic shortening or lengthening. The corresponding equation is described below:

$\Delta_{total} = \Delta_{helix} + \Delta_{shaft}$ (Equation 6)

where:

Δ_{total}= Total pile head vertical movement, in. (mm).

Δ_{helix}= Movement of helix plates within soil, in. (mm).

Δ_{shaft}= Shaft elastic shortening/lengthening, in. (mm).

The reliability of foundation system capacity and settlement predictions may be improved by performing full-scale field tests at the construction site using piles of same configuration as the intended production piles.

4.1.7.1 Shaft Elastic Shortening and Lengthening: Elastic shortening or lengthening of a CHANCE® SS5, SS175, RS2875.203, RS2875.276, RS3500, RS4500 or SS175/RS3500 combo shaft may be a significant contributor to overall pile head movement under load for long piles. For loads up to and including the allowable load limits found in the tables of this report, the length change can be estimated as:

$\Delta_{shaft} = P L/(A E)$ (Equation 7)

where:

Δ_{shaft} = Length change of shaft resulting from elastic shortening or lengthening, in (mm).

P = applied axial load, lbf (N).

L = effective length of the shaft, in. (mm). For SS175/RS3500 combo piles, an extra length of 6-inches (152 mm) should be added to shaft length in order to accommodate deformation due to each transition adaptor.

A = cross-sectional area of the shaft, see Table 1, in.^{2} (mm^2).

E = Young's modulus of the shaft, may be taken as 29,000 ksi (200 000 MPa).

The effective length of the shaft, L, may be approximated as the average of the distances from the point of load application to each helix plate.

4.1.7.2 Helix Movement: The evaluation of helix movement due to helix deformation, soil deformation, and the helix-soil interaction, is beyond the scope of this evaluation report. It is recommended that the user of this report consult with the helical pile manufacturer (Hubbell Power Systems, Inc.).

4.1.7.3 Coupler Slip: The slip of the helical pile coupler is $^1/_{16}$ inch for Types SS5 and SS175, and $^3/_{32}$ inch for Type RS2875.203, RS2875.276, RS3500 and RS4500 at the allowable load per coupling. Coupler slip for tension applications shall be included in pile settlement unless the pile is pre-loaded.

4.1.8 Foundation Design Documentation: The foundation design documentation, which is a part of the approved construction documents and prepared by a registered design professional, must include at least the following for each pile placement:

1. The manufacturer, helical pile configuration and catalog numbers of structural attachment bracket/ T-Pipe assembly or pile cap, as appropriate.
2. Minimum pile tip embedment and minimum effective torsional resistance termination criteria. There must be an explanation that the minimum effective torsional resistance is to be calculated as one of the following:
   a. The final torsional resistance for single-helix piles loaded in compression.
   b. The average of the last three torsional resistance readings taken at 1-foot (305 mm) tip embedment intervals, starting 2 feet (710 mm) prior to the final tip embedment, for all piles loaded in tension and for multi-helix piles loaded in compression.
3. Maximum pile tip embedment, if appropriate.
4. Construction details for bracket connections to structures, prescriptively specifying at least the following (as applicable):
   a. Type and condition of the structure to be supported.
   b. Bracing. Bracing in compliance with IBC Section 1810.2.2 is required for all structures to be supported by CHANCE® Remedial Repair Brackets or New Construction Pile Caps.
   c. Surface preparation.
   d. Drill holes, bolts and washer plates.
   e. Field welding.
   f. Edge distance.
   g. Concrete reinforcement.
   h. Leveling grout.

i. The permissible angles of inclination for installation for the helical pile foundation systems (shafts and brackets) are 3° ± 1° for Remedial Repair Brackets; 0° ± 1° for Direct Jack Brackets; and 0° ± 1° (or aligned with vertical) for New Construction Pile Caps.

5. Construction details must also indicate that materials with different corrosion protection coatings must not be combined in the same system and that the helical foundation systems must not be placed in electrical contact with structural steel, reinforcing steel or any other metal building components.

4.2 Installation:

4.2.1 General:

1. The CHANCE® helical foundation systems must be installed in accordance with this section (Section 4.2), IBC Section 1810.4.11, site-specific approved construction documents (engineering drawings and specifications), and the manufacturer's written installation instructions. In case of conflict, the most stringent governs.
2. The CHANCE® helical foundation systems must be installed by Hubbell Power Systems trained and certified installers. (At least one member of the installation crew must hold a current certification for basic training conducted by Hubbell Power Systems personnel.)
3. The helical piles are typically installed using portable or machine-mounted rotary hydraulic motors capable of exerting a torsional moment at least 10 percent higher than the maximum installation torque reported in Tables 7, 9 and 9A for the pile model being installed and an axial force (crowd) sufficient to cause the pile to penetrate the earth at a rate of approximately 3 inches (76.2 mm) per revolution. In addition, equipment capable of measuring the torsional resistance experienced by the pile during installation to an accuracy of ±10 percent of the minimum effective torsional resistance termination criterion specified in the Foundation Design Documentation (see Section 4.1.8) must be utilized for installation quality control. The foundation piles must be aligned both vertically and horizontally as specified in the approved plans.
4. The helical piles must be installed in a continuous manner with the pile advancing at a rate equal to at least 2.5 inches (64 mm) per revolution at the time of final torque measurement. Installation speeds must be limited to less than 25 revolutions per minute (rpm).
5. The foundation piles must be installed to the minimum pile tip embedment specified in the approved construction documents, including the Foundation Design Documentation.
6. For tension applications, the pile shall be installed such that the minimum depth from the ground surface to the uppermost helix is 12D, where D is the diameter of the largest helix. In cases where the installation depth is less than 12D, the minimum embedment depth shall be determined by a registered design professional based on site-specific soil conditions, which must be subject to the approval of the code official. For tension applications where the helical pile is installed at an embedment depth less than 12D, the torque-correlation soil capacity, P4, is outside the scope of this report.
7. The helical piles must be located in accordance with the approved plans and specifications.

4.2.2 Detailed Installation Procedures:

1. The drive tools (Kelly bar adapter, in-line torque indicator, if any, and pile drive adapter) must be assembled in accordance with the published instructions, and the drive tool assembly must be attached to the Kelly bar (if any) or the output shaft of the torque motor.
2. The pile lead section must be pinned into the drive adapter and must be secured with the coil-lock ring. Only CHANCE® bent-arm pins and coil lock rings can be used for this purpose. Replacement pins and coil-lock rings are available from Hubbell Power Systems and its distributors.
3. The tip of the lead section must be placed in the proper location according to the approved plans and specifications.
4. The torque motor must be activated to begin installation.
5. The piles' maximum installation torque rating must not be exceeded during the pile installations.
6. The installation must be stopped when the top of the lead section nears ground level.
7. If extension sections with helix plate(s) are to be used, they must be added in proper sequence in accordance with the approved foundation plans. All coupling nuts must be tightened so the bolts achieve a snug-tight condition as defined in Section J3 of AISC 360 (as a minimum, nuts must be tightened to one-quarter turn beyond hand-tight condition). For SS175/RS3500 Como piles, a C1500895 Transition Adapter must be added between the Model SS175 lead section and the first Model RS3500 extension in accordance with the report holder's installation instructions and this evaluation report.

8. The inclination angles must be in accordance with item 4i of Section 4.1.8 of this report.
9. The installation must be continued, using extensions without helix plates as necessary, until the minimum tip embedment and the minimum effective torsional resistance specified in the foundation plans are both met, unless one of the issues listed in Section 4.3, item 12, is encountered. All coupling nuts must be tightened per step 7 of this Section (Section 4.2.2).
10. The remedial repair foundation bracket or new construction pile cap must be installed per the manufacturer's published instructions and Section 4.2.4 or 4.2.5, respectively.

4.2.3 Field Quality Control Requirements:

1. A torque indicator that has been calibrated within the previous 12 months must be used for pile installation. Torque indicators which utilize a correlation between torsional resistance and hydraulic pressure(s) in the system supplying the torque motor must have been calibrated with the system that is used to make the production installations.
2. Rotational speed between 5 and 25 rpm must be maintained.
3. Axial thrust ("crowd") must be maintained in order to keep the pile moving between $2^1/_2$ and $3^1/_2$ inches (64 and 88.9 mm) per revolution. It is especially important that this pile moving speed be maintained whenever torsional resistance readings are being taken.
4. Alignment of the pile, drive tooling, Kelly bar (if any) and torque motor must be maintained to avoid inducing bending moments into the pile shaft.
5. Torsional resistance must be monitored during the entire installation operation. The pile's maximum installation torque rating must not be exceeded.
6. Extension sections with helix plate(s) (if any) must be added in the proper sequence in accordance with the foundation plans.
7. Torsional resistance must be recorded in embedment increments no greater than 5 feet (1524 mm) during the entire installation and just before the installation is terminated.
8. When installing single-helix piles that will be loaded in tension and all multi-helix piles, torsional resistance must be recorded at final tip embedment minus 2 feet (710 mm) and final embedment minus 1 foot (305 mm), in addition to the resistance at final embedment.
9. The tip embedment and torsional resistance readings must be verified to meet or exceed the specified termination criteria before terminating installation.
10. For single-helix compression piles, the final torsional resistance reading must be equal to or exceed the specified minimum.
11. For multi-helix piles, the average of the final three torsional resistance readings must be equal to or exceed the specified minimum.

4.2.4 Helical Piles with Remedial Repair Brackets (C1500121, C1500299, C1500147, C1500738 C1500840 and C1500841) Installation:

1. An area at each location adjacent to the building foundation must be excavated to expose the footing, grade beam, stem wall or column. For the C1500121 and C1500299 brackets, the width of the exposed area should be at least 18 inches (457 mm) and should extend 12 inches (305 mm) below the bottom of the footing or grade beam. For the C1500147 bracket, the width of the exposed area should be at least 22 inches (559 mm) and should extend 22 inches (509 mm) below the bottom of the footing or grade beam. For the C1500738, C1500840 and C1500841 brackets, the width of the exposed area should be at least 16 inches (406 mm) and should extend 20 inches (508 mm) below the bottom of the footing or grade beam.
2. Soil attached to the bottom of the footing or grade beam must be removed. The footing or grade beam must be prepared by chipping away irregularities from the bottom and side faces. Notching the footing or grade beam is recommended to allow the bracket to mount directly and adjacent to the load-bearing wall/column, but must be performed with the approval of the registered design professional and the code official. The vertical and horizontal surfaces of the footing or grade beam must be flat and reasonably smooth before the bracket is mounted.

3. Reinforcing steel within the footing must not be cut without the approval of the registered design professional and the code official.
4. The bearing surface of the concrete must be smooth, and free of all soil, debris and loose concrete, so as to provide a firm bearing surface for the repair bracket.
5. The bracket to the foundation or grade beam must be connected by means of two concrete anchor bolts described in Section 3.0 of this report. The installation of concrete anchors must be strictly in accordance with the ICC-ES evaluation report noted in Section 3.0 of this report. A 6-inch (152 mm) minimum concrete edge distance is required above and laterally (sideways) beyond concrete anchor bolts. An 8-inch (203 mm) minimum concrete footing width measured in the direction of concrete anchor bolt embedment is required.
6. The helical pile must be installed in accordance with Sections 4.2.1 through 4.2.3 of this report.
7. After the helical pile has been installed, any excess length must be cut off to allow for mounting to the bracket.
8. The T-pipe must be placed on the helical pile and must be connected to the bracket with the bolts and nuts provided with the bracket. The nuts must be tightened so the cross bolts achieve a snug-tight condition as defined in Section J3 of AISC 360 (as a minimum, nuts must be tightened to one-quarter turn beyond hand-tight condition), and the nuts (for the lifting bolts) must be tightened to one-quarter turn beyond hand-tight condition.
9. A hydraulic jack must be placed on top of the T-pipe and must be connected to the bracket.
10. Lifting or stabilizing of the structure can be done by applying load with the hydraulic jack. Any lifting or stabilizing of the structure must be verified by qualified personnel (a registered design professional) to ensure that no part of the foundation, structure, or helical pile is overstressed.
11. Once the foundation has been raised or stabilized, the nuts (for lifting bolts) must be tightened to one-quarter turn beyond hand-tight condition on the bracket bolts to secure the T-pipe and helical pile to the bracket.
12. The hydraulic jack must then be removed.
13. The excavation must be backfilled with properly compacted soil. Excess soil and debris must be removed.
14. The full installation instructions are contained in the training manual available from Hubbell Power Systems or online at the CHANCE University Certification website.

4.2.5 Helical Piles with New Construction Bracket (C1500458G, C1500459G, C1500465G, C1500467G, C1501356, C1501356G, C1501357, C1501357G, C1500781, C1500781G, C1500797, C1500797G, C1072726, C1072726G, C1072727 and C1072727G) Installation:

1. The lead helical section must be installed and successive extensions must be added as needed until the termination criteria (such as torque and depth) prescribed in the Foundation Design Documentation are met and the top of the shaft is at or above the required elevation. If necessary, the pile can be cut off in accordance with the manufacturer's instructions at the required elevation. The minimum embedment depths into the footing or grade beam depicted in Figure 8 must be adhered to.
2. The new construction bracket must be placed over the top of the helical pile shaft and must be seated firmly.
3. The concrete footing or grade beam must comply with IBC Section 1810.3.11 and this evaluation report. The center of shaft must be at least 6-inch away from the end/corner of the concrete footing or grade beam.
4. For fixed end condition and for piles that are used to resist tension forces, the shaft embedment depth into the footing or grade beam must be at least 7.5 inches (1905 mm).
5. If the pile is to be used to resist tension forces, or if the pile's shaft is RS2875.203, RS2875.276, RS3500, or RS4500 and is intended to be used for Seismic Design Category D, E, or F in compression or tension, then the embedment of the new construction bracket into the footing or grade beam and adequate steel reinforcement in the concrete footing or grade beam as required for resisting tension loads must be determined by a registered design professional, and the bracket must be through-bolted to the helical pile shaft with at least one bolt and matching nut as specified in Sections 3.2 and 3.3. Multiple bolts may be required as needed for the tension load. The nut must be tightened so the bolt achieves snug-tight

condition as defined in Section J3 of AISC 360 (as a minimum, nuts must be tightened to one-quarter turn beyond hand-tight condition).

6. The steel reinforcing bars must be placed and the concrete must be poured according to the approved construction documents. The concrete footing must be reinforced concrete, not plain concrete.
7. All helical pile components must be galvanically isolated from the concrete reinforcing steel and other metal building components.

4.3 Special Inspections:

4.3.1 IBC

Special inspections in accordance with Section 1705.9 of the 2024, 2021, 2018, 2015 and 2012 IBC (Section 1704.10 of the 2009 IBC) must be performed continuously during installation of the CHANCE® helical foundation system (piles and brackets). Items to be recorded and confirmed by the special inspector must include, but are not necessarily limited to, the following:

1. Verification of the product manufacturer and the manufacturer's certification of installers.
2. Product configuration and identification (including catalog numbers) for lead sections, extension sections, bracket/T-pipe/Pile cap assemblies, transition adapters for SS175/RS3500 combo piles, bolts/threaded rods, and nuts and washers as specified in the construction documents and this evaluation report.
3. Installation equipment used.
4. Written installation procedures.
5. Verification that the actual, as-constructed pile tip embedment and effective torsional resistances are within the limits specified in the Foundation Design Documentation.
6. Inclination and horizontal position/location of helical piles.
7. Tightness of all bolts/threaded rods.
8. Verification that the new construction pile cap plate is in full contact with the top of pile shaft.
9. Verification of bracket bearing plate contact at the outer corner region of the foundation and absence of cracks in the foundation in the vicinity of the bracket.
10. Compliance of the installation with the approved construction documents and this evaluation report.
11. Where on-site welding is required, special inspection in accordance with Section 1705.2 of the 2024, 2021, 2018, 2015 and 2012 IBC (Section 1704.3 of the 2009 IBC) must be conducted.
12. Both minimum tip embedment and minimum effective torsional resistance termination criteria must be met before installation ceases, unless one of the following issues arises:
    a. Continuing the installation would pose a safety concern.
    b. Continuing the installation would cause the maximum installation torque rating of the pile listed in Tables 7 and 9 of this report to be exceeded.
    c. Continuing the installation would cause the maximum tip embedment limit (if any) to be exceeded.

4.3.2 IRC

Continuous special inspection of helical foundation system and devices installed under the provisions of the IRC defined in this report is not required.

5.0 CONDITIONS OF USE:

The CHANCE® Model SS5, SS175, RS2875.203, RS2875.276, RS3500, RS4500 and SS175/RS3500 combo Helical Foundation Systems described in this report comply with, or are suitable alternatives to what is specified in, the codes indicated in Section 1.0 of this report, subject to the following conditions:

5.1 The CHANCE helical foundation systems are manufactured, identified and installed in accordance with this report, the approved construction documents (engineering drawings and specifications), and the manufacturer's written installation instructions, which must be available at the jobsite at all times during installation. In case of conflict, the most stringent requirement governs.

5.2 The CHANCE helical foundation systems have been evaluated for support of structures assigned to Seismic Design Categories A, B and C in accordance with the IBC and IRC. Except for the CHANCE® Helical Anchor Systems in Section 5.3 of this evaluation report, helical foundation systems that support structures assigned to Seismic Design Category D, E or F in accordance with the IBC, and Seismic Design Categories D through D_2 and E in accordance with the IRC, are outside the scope of this report, and are subject to the approval of the code official based upon submission of a design in accordance with the code by a registered design professional.

5.3 The RS2875.203, RS2875.276, RS3500, and RS4500 helical pile systems intended to support structures assigned to Seismic Design Categories D, E, or F in accordance with the IBC, and Seismic Design Categories D through D_2 and E in accordance with the IRC are limited to use with new construction brackets and the anchorage of the new construction bracket into the footing or grade beam must be addressed by a registered design professional in accordance with this section and subject to approval by code official. The following conditions must be considered:

a. The strength of the new construction bracket connection to the shaft and to the foundation of the structure shall comply with IBC Section 1810.3.11.2 and must not exceed the published capacities noted in Section 4.1.2 of this report.

b. The shaft seismic flexural length must be determined by a registered design professional in accordance with applicable code sections of the IBC. The shaft seismic flexural length is defined as the length of the shaft equal to 120 percent of the shaft flexural length.

c. The shaft couplers shall be limited to the shaft capacity reported in Section 4.1.3 of this report and must comply with the requirements in IBC Section 1810.3.6.1.

d. The analysis of the seismic forces imparted on the bracket, bracket connection to foundation, and pile must be prepared by a registered design professional taking into account soil characteristics such as liquefiable zone, length of pile in air, or length of fluid conditions per appropriate code.

5.4 Installations of the helical foundation systems are limited to regions of concrete members where analysis indicates no cracking will occur at service load levels.

5.5 All brackets (Standard and Heavy-Duty Remedial Repair Brackets, Direct Jack Brackets, and New Construction Pile Caps) must be used only to support structures that are laterally braced as defined in IBC Section 1810.2.2. Shaft couplings must be located within firm or soft soil as defined in Section 4.1.3. Tables 6 through 15 provide the nominal, LRFD design, and allowable strengths in firm and soft soil.

5.6 Use of the helical foundation systems or devices in exposure conditions that are indicative of potential pile deterioration or corrosion situations as defined by the following: (1) soil resistivity less than 1,000 ohm-cm; (2) soil pH less than 5.5; (3) soils with high organic content; (4) soil sulfate concentrations greater than 1,000 ppm; (5) soils located in a landfill, or (6) soil containing mine waste, is beyond the scope of this evaluation report.

5.7 Zinc-coated steel and bare steel components must not be combined in the same system, except where the sacrificial thickness for the zinc-coated components is taken as that for bare steel components (0.036-inch or 915 µm). All helical foundation components must be galvanically isolated from concrete reinforcing steel, building structural steel, or any other metal building components.

5.8 The new construction helical piles (piles with new construction pile caps) must be installed vertically into the ground with a maximum allowable angle of inclination of ±1°. The tops of pile caps must be embedded into the concrete footing with a minimum 4-inch (101.6 mm) vertical embedment and a minimum 4-inch (101.6 mm) side embedment beyond the perimeter of the steel cap plates, except as specifically noted in Section 4.2.5. To comply with requirements found in IBC Section 1810.3.1.3, the superstructure must be designed to resist the effects of helical pile eccentricity. Adequate concrete cover and reinforcement specified by the project engineer must be provided to meet the requirements of ACI 318 under the IBC, for new construction helical pile caps to prevent steel cap plate bending, concrete breakout, pullout, and shear.

5.9 The retrofit helical piles must be installed such that the angle of inclination does not exceed 3° ± 1° for Standard and Heavy-Duty Remedial Repair Brackets and 0° ± 1° for Direct Jack Brackets.

5.10 For SS175/RS3500 Combo piles, the C1500895 transition adapter must be located at a distance of no less than 5 feet (1524 mm) below the bracket in firm soils, and no less than 10 feet (3048 mm) in soft soils.

5.11 Special inspection is provided in accordance with Section 4.3 of this report.

5.12 Engineering calculations and drawings, in accordance with recognized engineering principles as described in IBC Section 1604.4, and complying with Section 4.1 of this report, are prepared by a registered design professional and approved by the code official.

5.13 The adequacy of the concrete structures that are connected to the CHANCE brackets must be verified by a registered design professional, in accordance with applicable code provisions such as Chapter 13 of ACI 318 under the 2024, 2021, 2018, and 2015 IBC (Chapter 15 of ACI 318 under the 2012 and 2009 IBC) and Chapter 18 of the IBC. Verification is subject to the approval of the code official.

5.14 A site-specific geotechnical investigation report in accordance with Section 4.1.1 of this report for each project site must be provided to the code official for approval under the IBC.

5.15 The load combinations prescribed in 2024 and 2021 IBC Section 1605.1 (2018, 2015, 2012, and 2009 IBC Section 1605.3.1) must be used to determine the applied loads. When using the alternative basic load combinations prescribed in the 2024 and 2021 IBC Section 1605.2 (2018, 2015, 2012, and 2009 IBC Section 1605.3.2), the allowable stress increases permitted by material chapters of the IBC (Chapters 19 through 23, as applicable) or the referenced standards are prohibited.

5.16 The minimum helical pile center-to-center spacing is four times the diameter of the largest helical bearing plate. For piles with closer spacing, the pile allowable load reductions due to pile group effects must be included in the geotechnical report described in Section 4.1.1 of this report, and must be considered in the pile design by a registered design professional. Load reductions are subject to the approval of the code official.

5.17 See Section 4.2.1, item 5, for the minimum pile tip embedment requirement.

5.18 Settlement of helical piles is beyond the scope of this evaluation report and must be determined by a registered design professional as required in IBC Section 1810.2.3, and after consultation with Hubbell Power Systems, Inc.

5.19 Post-installed concrete anchors, including requirements for installation and inspection, must comply with the applicable ICC-ES evaluation reports noted in Sections 3.2.4.1.4, 3.2.4.1.5 and 3.2.4.2.4 of this report. The anchors must be installed into normal-weight concrete.

5.20 Requirements set forth in the footnotes of Figure 9 and Tables 6 through 23 must be satisfied.

5.21 Except for the CHANCE® Model RS2875.203, RS2875.276, RS3500, and RS4500 Helical Anchor Systems with new construction brackets, evaluation of compliance with IBC Section 1810.3.11.1 for buildings assigned to Seismic Design Categories (SDC) C, D, E, and F and with IBC Section 1810.3.6 for all buildings, are outside of the scope of this evaluation report. Such compliance must be addressed by a registered design professional for each site, and the work of the design professional is subject to approval by the code official.

5.22 The CHANCE helical foundation systems are manufactured by Hubbell Power Systems, Inc. – Centralia Operations, 210 North Allen Street, Centralia, Missouri 65240; under a quality control program with inspections by ICC-ES.

6.0 EVIDENCE SUBMITTED

Data in accordance with the ICC-ES Acceptance Criteria for Helical Pile Systems and Devices AC358(24), published April 2025.

7.0 IDENTIFICATION

7.1 The CHANCE® Model SS5, SS175, RS2875.203, RS2875.276, RS3500, RS4500 and SS175/RS3500 combo Helical Foundation System components described in this report are identified by labels that include the report holder's name (Hubbell Power Systems, Inc.) and address, the product catalog number and description, the ICC-ES evaluation report number (ESR-2794). Additionally, Model SS-5 and SS175 helical piles are identified by the characters "C4XY" and "C6XY", respectively, and the characters XYYY (where X and Y are alpha-numeric characters) stamped into the shaft. Model RS2875.203 and RS4500 extensions have the date (month/year) and heat no. (alpha numeric characters) stamped into the shaft. The CHANCE® Remedial Repair Brackets and the T-Pipes are stamped with the letter "C". All helical lead sections and helical extension sections have the word "CHANCE" stamped on the top of the helix.

7.2 The report holder's contact information is the following:

HUBBELL POWER SYSTEMS, INC.
210 NORTH ALLEN STREET
CENTRALIA, MISSOURI 65240
(573) 682-8273
www.chancefoundationsolutions.com
civilconstruction@hubbell.com

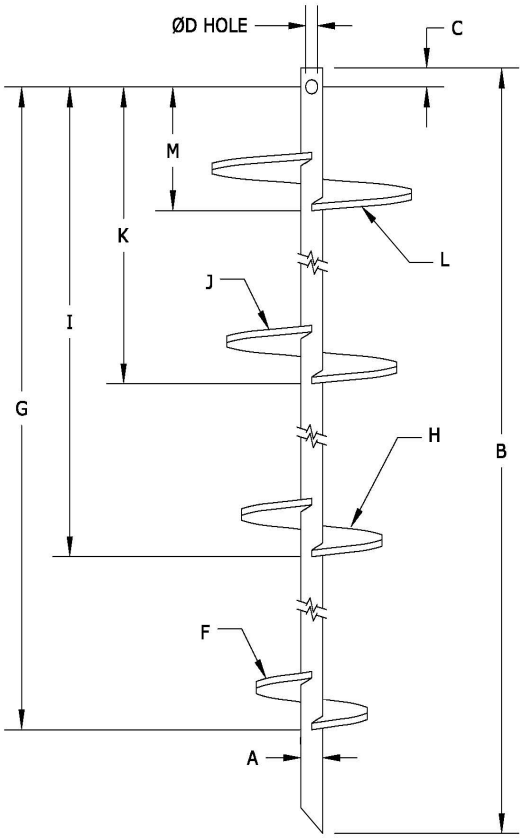

FIGURE 1A—SS5 & SS175 LEAD SECTIONS

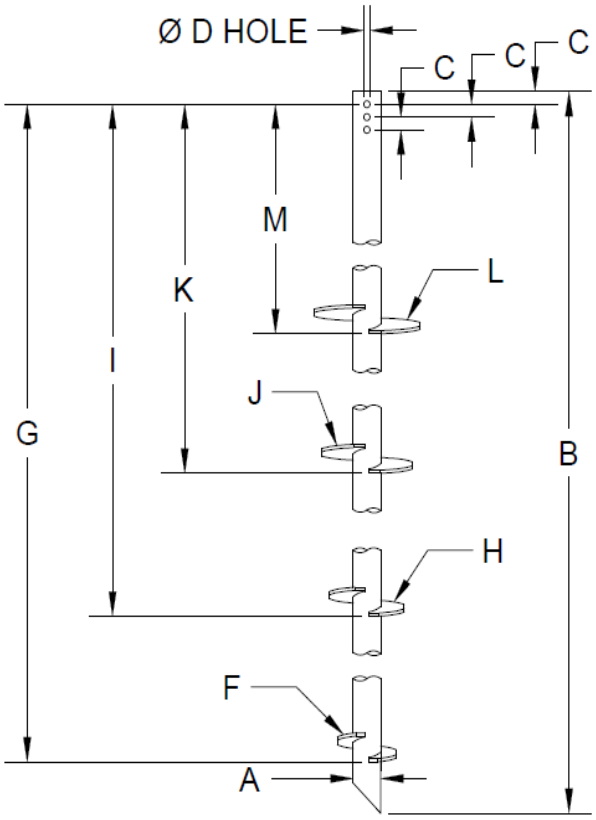

FIGURE 1B—RS2875.203, RS2875.276, RS3500 & RS4500 LEAD SECTIONS (RS4500 not shown)

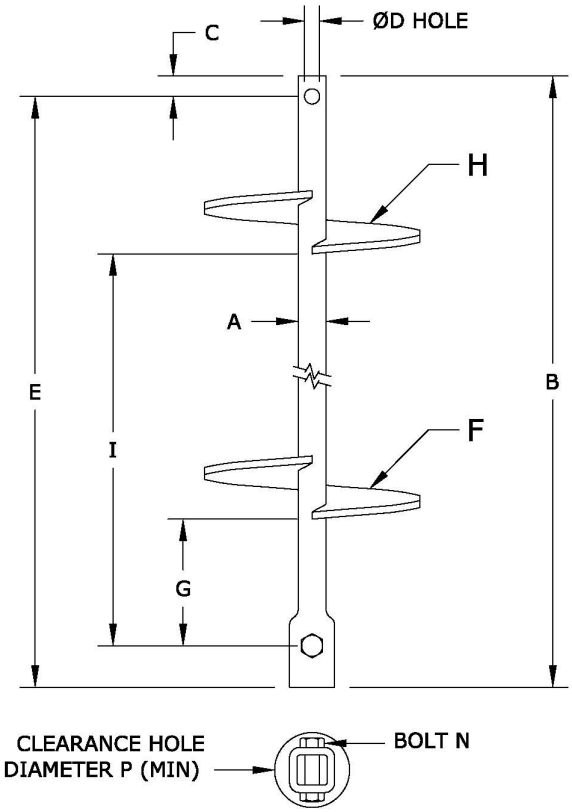

FIGURE 2A—SS5 & SS175 EXTENSION SECTIONS

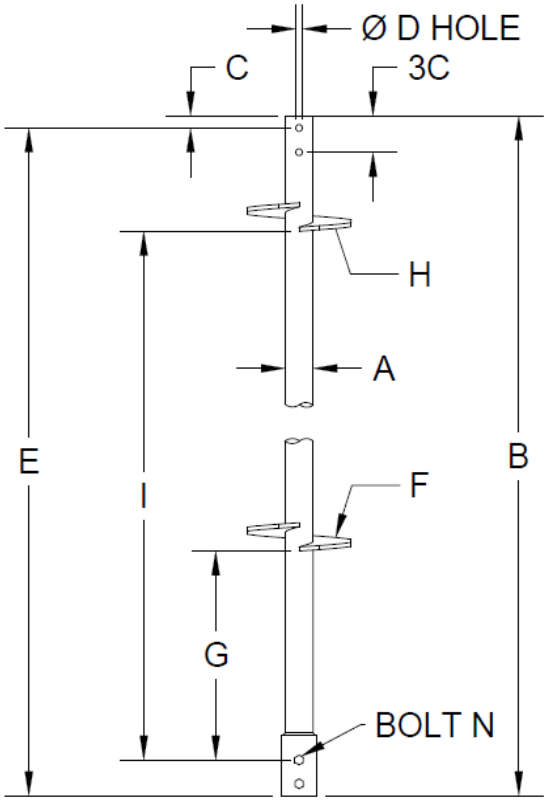

FIGURE 2B—RS2875.203, RS2875.276, RS3500 & RS4500 EXTENSION SECTIONS (RS2875.203 and RS4500 not shown)

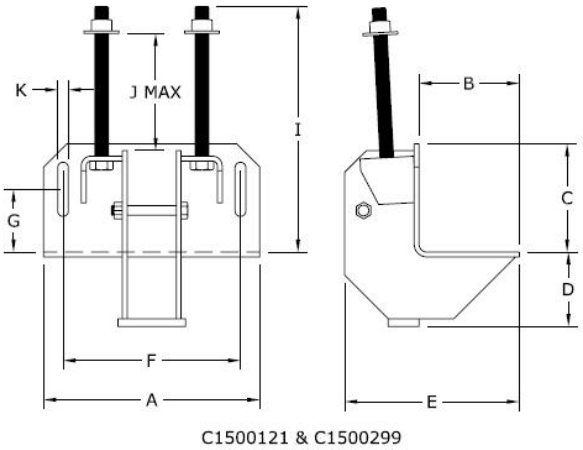

FIGURE 3—STANDARD REMEDIAL REPAIR BRACKETS

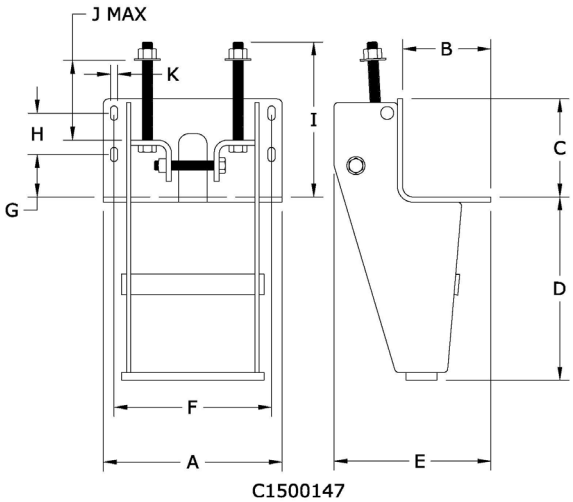

FIGURE 4—HEAVY-DUTY REMEDIAL REPAIR BRACKET

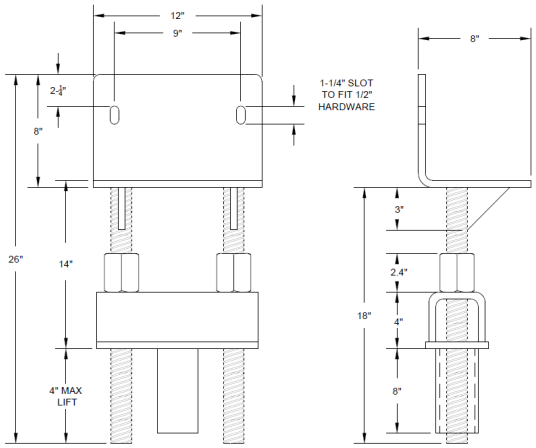

FIGURE 5—DIRECT JACK REMEDIAL REPAIR BRACKETS

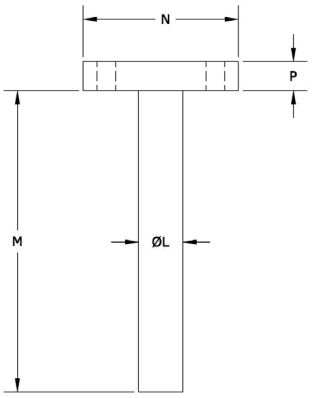

FIGURE 6—T-PIPE FOR STANDARD AND HEAVY-DUTY REMEDIAL REPAIR BRACKETS

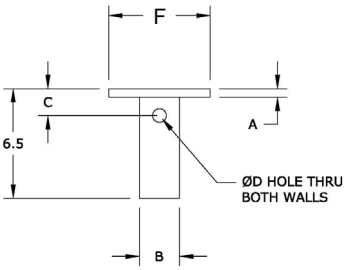

FIGURE 7A—NEW CONSTRUCTION PILE CAP FOR SS5 & SS175

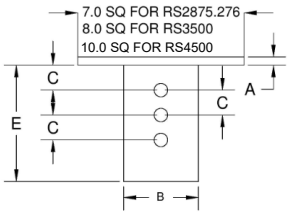

FIGURE 7B—NEW CONSTRUCTION PILE CAP FOR RS2875.203 & 276, RS3500 & RS4500

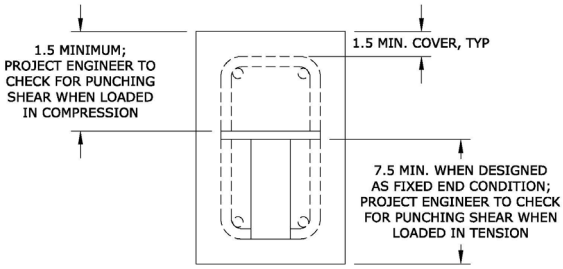

FIGURE 8—NEW CONSTRUCTION PILE CAP CONSTRUCTION DETAILS

Notes: (1) With respect to punching shear resistance, capacities related to concrete breakout and/or pullout must also be considered by the registered design professional. (2) See Section 4.2.5 for additional requirements.

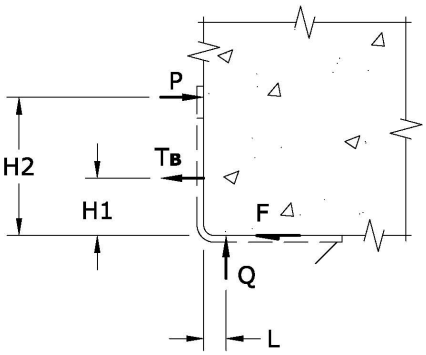

FIGURE 9—FORCES APPLIED TO FOUNDATION BY REMEDIAL REPAIR BRACKETS

Design Assumptions: The foundation and its interaction with soils beyond the pile excavation is sufficiently rigid to support the inverted corbel action (torsion) due to the "offset" bracket bearing relative to the center of the foundation. Certain project conditions (like "loose" stone/masonry foundation walls) may not comply with this design assumption. The foundation must be able to provide adequate lateral restraint (bracing) for the shaft that is equal to or greater than 0.4 percent of the allowable axial compression load of the pile.

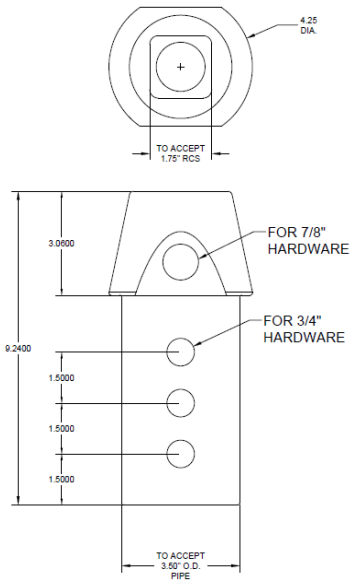

FIGURE 10—C1500895 TRANSITION ADAPTER FOR CONNECTION BETWEEN SS175 LEAD AND RS3500 EXTENSION

ICC-ES® Most Widely Accepted and Trusted

TABLE 1—MODELS AND DIMENSIONS OF CHANCE HELICAL PILE LEAD SECTIONS BY CATALOG NUMBER[1]

Catalog Number	Model	Area (in^2)	A (in)	B (in)	C (in)	D (in)	F (in)	G (in)	H (in)	I (in)	J (in)	K (in)	L (in)	M (in)
C1500001				83			8	76	-	-	-	-	-	-
C1500002				60			8	53	-	-	-	-	-	-
C1500003				83			10	76	-	-	-	-	-	-
C1500004				83			12	76	-	-	-	-	-	-
C1500005				83			14	76	-	-	-	-	-	-
C1500006				83			8	76	10	52	-	-	-	-
C1500007				64			8	60	10	37	12	7	-	-
C1500031				124			8	117	10	93	-	-	-	-
C1500051				83			10	76	12	47	-	-	-	-
C1500058				60			10	53	-	-	-	-	-	-
C1500156				26			8	18	-	-	-	-	-	-
C1500160				37			8	33	10	9	-	-	-	-
C1500161	SS5[2]	2.20	1.50	43	1.09	0.81	10	39	12	9	-	-	-	-
C1500242				60			12	53	-	-	-	-	-	-
C1500243				60			14	53	-	-	-	-	-	-
C1500397				83			8	76	10	52	12	22	-	-
C1500398				124			10	117	12	87	14	51	-	-
C1500489				83			10	76	12	46	14	10	-	-
C1500531				124			12	117	-	-	-	-	-	-
C15000070302				64			12	57	14	21	-	-	-	-
T1100607				83			14	76	14	34	-	-	-	-
T1100676				83			8	76	-	-	-	-	-	-
T1100677				83			10	76	-	-	-	-	-	-
T1100678				83			12	76	-	-	-	-	-	-
T1100720				64			8	60	10	24	-	-	-	-
C1100227				38			8	30	10	6	-	-	-	-
C1100235				66			8	58	10	35	12	6	-	-
C1100247				130			8	122	10	98	12	68	14	32
C1100505				130			14	122	14	80	14	38	-	-
C1500010				66			8	58	-		-	-	-	-
C1500011				66			10	58	-	-	-	-	-	-
C1500012				66			8	58	10	34	-	-	-	-
C1500093				66			10	58	12	34	-	-	-	-
C1500179	SS175[2]	3.01	1.75	38	1.70	1.00	8	30	10	6	-	-	-	-
C1500180				66			8	58	10	35	12	6	-	-
C1500181				130			14	122	14	80	14	38	-	-
C1500401				84			8	76	10	52	12	22	-	-
C1500402				130			10	122	12	92	14	56	-	-
C1500493				84			8	76	10	52	-	-	-	-
T1100674				84			10	76	12	46	14	10	-	-
T1100730				84			14	76	14	34	-	-	-	-
T1100853				84			10	76	10	46	10	16	-	-
T1071315				129			8	121	-	-	-	-	-	-
C1071629				86			8	79	-	-	-	-	-	-
T1070813				86			10	79	-	-	-	-	-	-
C1500021				86			12	79	-	-	-	-	-	-
C1500022				86			14	79	-	-	-	-	-	-
C1500023				86			10	79	12	49	-	-	-	-
T1070812	RS3500	2.82	3.5	129	1.5	0.81	10	121	12	91	-	-	-	-
C1070563				86			8	79	10	55	12	25	-	-
C1070564 & C1500024				86			10	79	12	49	14	13	-	-
C1070565				129			12	121	14	85	14	43	-	-
C1070566				129			8	121	10	97	12	67	14	31
C1070567				129			10	121	12	91	14	55	14	13
C1070568				129			12	121	14	88	14	49	14	9

(Continued)

TABLE 1—MODELS AND DIMENSIONS OF CHANCE HELICAL PILE LEAD SECTIONS BY CATALOG NUMBER[1,2] (CONTINUED)

Catalog Number	Model	Area (in^2)	A (in)	B (in)	C (in)	D (in)	F (in)	G (in)	H (in)	I (in)	J (in)	K (in)	L (in)	M (in)
T1071312	RS2875.276	2.11	2.875	126	1.5	0.81	8	121	-	-	-	-	-	-
C2788210				84			8	79	-	-	-	-	-	-
C2788002				64			10	59	-	-	-	-	-	-
C2788001				84			10	79	-	-	-	-	-	-
C2788221				84			12	79	-	-	-	-	-	-
C2788222				84			14	79	-	-	-	-	-	-
C2788007				64			8	59	10	35	-	-	-	-
C2788003				64			10	59	12	29	-	-	-	-
C2788009				84			10	79	12	49	-	-	-	-
C2788004				84			8	79	10	55	12	25	-	-
C2788005				84			10	79	12	49	14	13	-	-
C2788006				126			8	121	10	97	12	67	14	31
C2788179				126			10	121	12	91	14	55	14	13
C2784764	RS2875.203	1.59	2.875	126	1.5	0.81	8	121	-	-	-	-	-	-
C2784765				84			8	79	-	-	-	-	-	-
C2784766				64			10	59	-	-	-	-	-	-
C2784767				84			10	79	-	-	-	-	-	-
C2784768 & C2784509				84			12	79	-	-	-	-	-	-
C2784769 & C2784511				84			14	79	-	-	-	-	-	-
C2784770				64			8	59	10	35	-	-	-	-
C2784514				64			8	59	10	38	12	8	-	-
C2784771				64			10	59	12	29	-	-	-	-
C2784772 & C2784506				84			10	79	12	49	-	-	-	-
C2784773				84			8	79	10	55	12	19	-	-
C2784774 & C2784507				84			10	79	12	49	14	13	-	-
C2784775				126			8	121	10	97	12	67	14	31
C2784776				126			10	121	12	92	14	55	14	13
C1070917	RS4500	4.12	4.5	84	1.5	1.06	8	77						
C1070976				84			10	77						
C1072703				84			12	77						
C1071995				84			14	77						
C1072377				84			8	77	10	53				
C1071799				84			10	77	12	47				
C1070889				84			8	77	10	53	12	23		
C1070943				84			10	77	12	47	14	11		
C1070890				126			8	119	10	95	12	65	14	29
C1070892				126			10	120	12	90	14	55	14	15

For **SI:** 1 inch = 25.4 mm, I $inch^2$ = 645.2 mm^2.

[1]Refer to Figures 1A & 1B for dimensions A through M. Dimensions in this table do not account for corrosion loss.

[2]When catalog numbers for SS5 and SS175 lead sections end with "NG", it indicates that the product is nongalvanized (bare steel).

TABLE 2—MODELS AND DIMENSIONS OF CHANCE HELICAL PILE EXTENSIONS BY CATALOG NUMBER [1]

Catalog Number	Model	A (in)	B (in)	C (in)	D (in)	E (in)	F (in)	G (in)	H (in)	I (in)	N[2]	P (in)
C1500008	SS5[3]	1.50	61	1.09	0.81	57	-	-	-	-	$^3/_4$-10 HHB per ASTM A193 Gr B7 w/ Hex Jam Nut	4.0
C1500009			84			80	-	-	-	-		
C1500047			41			37	-	-	-	-		
C1500048			123			120	-	-	-	-		
C1500159			61			57	12	28	-	-		
C1500166			41			37	14	28	-	-		
C1500166L			61			57	14	47	-	-		
C1500013	SS175[3]	1.75	62	1.70	1.00	58	-	-	-	-	$^7/_8$-9 HHB per ASTM A193 Gr B7 w/ Hex Jam Nut	5.0
C1500014			84			80	-	-	-	-		
C1500183			41			37	-	-	-	-		
C1500184			127			123	-	-	-	-		
C1500185			49			45	14	37	-	-		
C1500186			84			80	14	36	14	72		
C1500470			62			58	14	4	-	-		
C1501017			49	1.70	1.00	45	14	19	-	-		
C1501291	RS3500	3.5	42	1.5	0.81	40	-	-	-	-	¾-10 HHB per SAE J429 Grade 5 w/ Hex Nut	-
C1501240			60			59	-	-	-	-		
C1501241			84			83	-	-	-	-		
C1501242			120			119	-	-	-	-		
C1501293			42			41	-	-	14	27		
C1501295			84			83	14	28	14	69		
C2788225	RS2875 .276	2.875	42	1.5	0.81	40	-	-	-	-	¾-10 HHB per SAE J429 Grade 5 w/ Hex Nut	-
C2788218			60			58	-	-	-	-		
C2788219			84			82	-	-	-	-		
C2788220			120			118	-	-	-	-		
C2788228			42			40	-	-	14	24		
C2784300CU	RS2875 .203	2.875	40.5	1.5	0.81	39					¾-10 HHB per SAE J429 Grade 5 w/ Hex Nut	
C2784500CU			61.5			60						
C2784700CU			82.5			81						
C27841000CU			124.5			123						
C2784501CU			61.5			60			14	24		
C1072466CU	RS4500	4.5	40.5	1.5	1.06	39					1-8 HHB per ASTM A193 Gr B7 w/ Hex Jam Nut	-
C1072467CU			61.5			60						
C1072468CU			82.5			81						
C1072469CU			125.5			124						
C1070886CU			61.5			60			14	46		

For **SI:** 1 inch = 25.4 mm.

[1]Refer to Figures 2A & 2B for dimensions A through P. Dimensions in this table do not account for corrosion loss.
[2]Refer to Sections 3.2.3 and 3.3.3 for coupling bolt and nut requirements.
[3]When catalog numbers for SS5 and SS175 extension sections end with "NG", it indicates that the product is nongalvanized (bare steel).

TABLE 3—MODELS AND DIMENSIONS OF CHANCE REMEDIAL REPAIR BRACKETS AND T-PIPES BY CATALOG NUMBER[1]

Catalog Number	Shaft Model	A (in)	B (in)	C (in)	D (in)	E (in)	F (in)	G (in)	H (in)	I (in)	J (in)	K (in)	L (in)	M (in)	N (in)	P (in)
C1500121[2]	SS5 & RS2875.276	14.0	6.5	7.0	4.8	11.3	11.5	4.1	-	15.9	8.4	0.69	-	-	-	-
C1500147[2]	SS175	17.3	8.5	9.5	17.7	15.1	15.2	4.1	8.1	15.0	8.5	0.69	-	-	-	-
C1500299[2]	SS175	14.0	6.5	7.0	4.8	11.3	11.5	4.1	-	15.9	8.4	0.69	-	-	-	-
C1500474[2]	SS175	-	-	-	-	-	-	-	-	-	-	-	3.25	34.0	11.5	2.00
C1500486[2]	SS5	-	-	-	-	-	-	-	-	-	-	-	2.63	18.0	9.25	2.00
C1500487[2]	SS5	-	-	-	-	-	-	-	-	-	-	-	2.63	18.0	9.25	1.75
C1500488[2]	SS175	-	-	-	-	-	-	-	-	-	-	-	2.88	18.0	9.25	1.75
C1500475	RS3500	-	-	-	-	-	-	-	-	-	-	-	2.75	18	11.5	2.0
C2788012	RS2875.276	-	-	-	-	-	-	-	-	-	-	-	1.5	12	9.25	2.00
C2788011	RS2875.276	-	-	-	-	-	-	-	-	-	-	-	1.5	12	9.25	1.75
C2780001	RS2875.203	-	-	-	-	-	-	-	-	-	-	-	1.75	12	9.25	2.00
C2780002	RS2875.203	-											1.75	12	9.25	1.75

For **SI:** 1 inch = 25.4 mm.

[1]Refer to Figures 3, 4 and 6 for dimensions A through P. Dimensions in this table do not account for corrosion loss.
[2]When catalog numbers end with "NG", it indicates that the product is nongalvanized (bare steel).

TABLE 4—MODELS AND DIMENSIONS FOR NEW CONSTRUCTION PILE CAPS[1]

Catalog Number	Shaft Model	A (in)	B (in)	C (in)	D (in)	E (in)	F (in)
C1500458G	SS5	0.50	2.38	-	-	-	6
C1500459G	SS175	0.75	2.88	-	-	-	6
C1500465G	SS5	0.50	2.38	1.09 X 1	0.81	-	6
C1500467G	SS175	0.75	2.88	1.70 X 1	1.00	-	6
C1501356(G)	RS3500	0.75	4.5	-	-	6	8
C1501357(G)	RS3500	0.75	4.5	1.5 X 3	0.81	7	8
C1500781(G)	RS2875.203 & 276	0.5	3.5	-	-	6	7
C1500797(G)	RS2875.203 & 276	0.5	3.5	1.5 X 2	0.81	7	7
C1072726(G)	RS4500	0.75	5.563	-	-	6	10
C1072727(G)	RS4500	0.75	5.563	1.55 X 2	1.06	7	10
C1500777(G)	SS5	0.50	2.38	-	-	-	7
C1500778(G)	SS175	0.50	2.88	-	-	-	8
C1500793(G)	SS5	0.50	2.38	1.15 X 1	0.87	-	7
C1500794(G)	SS175	0.50	2.88	1.75 X 1	1.0	-	8

For **SI:** 1 inch = 25.4 mm.

[1]Refer to Figures 7A & 7B for dimensions A through F. Dimensions in this table do not account for corrosion loss.

(G): The cap is available as galvanized and nongalvanized (bare steel). Catalog items with "G" suffix are galvanized. Catalog numbers without "G" suffix are nongalvanized (bare steel)

TABLE 5—NOMINAL, LRFD DESIGN AND ASD ALLOWABLE STRENGTHS OF HELIX PLATES FOR SHAFT AXIAL TENSION AND COMPRESSION[1]

Shaft Model	Outside Dimension (in)	Thickness (in)	Nominal Strength (kips)	LRFD Design Strength (kips)	ASD Allowable Strength (kips)
SS5	8	$^3/_8$	57.3	43.0	28.7
	10		47.7	35.8	23.8
	12		44.2	33.2	22.1
	14		54.1	40.6	27.1
SS175	8	$^3/_8$	84.5	63.4	42.3
	10	$^3/_8$	66.1	49.6	33.1
	12	$^3/_8$	57.5	43.1	28.7
	14	$^3/_8$	51.8	38.9	25.9
RS3500	8	$^1/_2$	141.1	105.8	70.6
	10		155.1	116.3	77.6
	12		159.6	119.7	79.8
	14		139.4	104.6	69.7
RS2875.276	8	$^3/_8$	113.9	85.4	56.9
	10		94.5	70.9	47.3
	12		93.0	69.8	46.5
	14		100.3	75.2	50.2
RS2875.203	8	$^3/_8$	135.0	101.3	67.5
	10		122.7	92.0	61.4
	12		127.1	95.3	63.6
	14		124.9	93.6	62.4
RS4500	8	½	180.2	135.2	90.1
	10		180.2	135.2	90.1
	12		180.2	135.2	90.1
	14		180.2	135.2	90.1

For **SI:** 1 inch = 25.4 mm, 1 kip = 4.448 kN.

[1]Capacities in the table include allowance for corrosion over a 50-year service life for galvanized materials. The 50-year service life allowance for nongalvanized (bare steel) $^3/_8$-inch thick helix plates on SS5 and SS175 shafts results in helix plate strengths equal to 88% of their strength values for the galvanized case. See Sections 4.1.4 and 4.1.6 of this evaluation report for helix capacity and system capacity, respectively.

TABLE 6—NOMINAL AND LRFD DESIGN STRENGTHS OF HELICAL PILE LEAD SECTIONS BY CATALOG NUMBER[1,2]

Catalog Number	Nominal Tension Strength (kips)	Design Tension Strength (kips)	Nominal & LRFD Design Compression Strengths (kips)							
			Firm Soil				Soft Soil			
			Fixed		Pinned		Fixed		Pinned	
			Nominal	Design	Nominal	Design	Nominal	Design	Nominal	Design
SS5 Helical Pile Lead Sections[4]										
C1500001	57.3	43.0	57.3	43.0	54.4	43.0	26.6	24.0	13.6	12.2
C1500002	57.3	43.0	57.3	43.0	54.4	43.0				
C1500003	47.7	35.8	47.7	35.8	47.7	35.8				
C1500004	44.2	33.2	44.2	33.2	44.2	33.2				
C1500005	54.1	40.6	54.1	40.6	54.1	40.6				
C1500006	70.0	52.5	89.8	80.8	54.4	48.9				
C1500007	70.0	52.5	89.8	80.8	54.4	48.9				
C1500031	70.0	52.5	89.8	80.8	54.4	48.9				
C1500051	70.0	52.5	89.8	80.8	54.4	48.9				
C1500058	47.7	42.9	47.7	42.9	47.7	42.9				
C1500156	57.3	51.6	57.3	51.6	54.4	48.9				
C1500160	70.0	52.5	89.8	80.8	54.4	48.9				
C1500161	70.0	52.5	89.8	80.8	54.4	48.9				
C1500242	44.2	39.8	44.2	39.8	44.2	39.8				
C1500243	54.1	48.7	54.1	48.7	54.1	48.7				
C1500397	70.0	52.5	89.8	80.8	54.4	48.9				
C1500398	70.0	52.5	89.8	80.8	54.4	48.9				
C1500489	70.0	52.5	89.8	80.8	54.4	48.9				
C1500531	44.2	39.8	44.2	39.8	44.2	39.8				
C15000070302	70.0	52.5	89.8	80.8	54.4	48.9				
T1100607	70.0	52.5	89.8	80.8	54.4	48.9				
T1100676	57.3	51.6	57.3	51.6	54.4	48.9				
T1100677	47.7	42.9	47.7	42.9	47.7	42.9				
T1100678	44.2	39.8	44.2	39.8	44.2	39.8				
T1100720	70.0	52.5	89.8	80.8	54.4	48.9				
SS175 Helical Pile Lead Sections[4]										
C1100227	99.8	75.0	100	90	100	90	50.5	45.4	25.8	23.2
C1100235	99.8	75.0	100	90	100	90				
C1100247	99.8	75.0	100	90	100	90				
C1100505	99.8	75.0	100	90	100	90				
C1500010	99.8	75.0	100	90	100	90				
C1500011	66.1	59.5	66.1	59.5	66.1	59.5				
C1500012	99.8	75.0	100	90	100	90				
C1500093	99.8	75.0	100	90	100	90				
C1500179	99.8	75.0	100	90	100	90				
C1500180	99.8	75.0	100	90	100	90				
C1500181	99.8	75.0	100	90	100	90				
C1500401	99.8	75.0	100	90	100	90				
C1500402	99.8	75.0	100	90	100	90				
C1500493	99.8	75.0	100	90	100	90				
T1100674	99.8	75.0	100	90	100	90				
T1100730	99.8	75.0	100	90	100	90				
T1100853	99.8	75.0	100	90	100	90				
RS3500 Helical Pile Lead Sections[3]										
T1071315	100	86.1	128.0 (125.2)	115.2 (112.7)	121.9 (116.7)	109.7 (105.1)	110.0 (100.7)	99.0 (90.6)	90.7 (76.2)	81.6 (68.6)
C1071629										
T1070813										
C1500021										
C1500022										
C1500023										
C1500024										
T1070812										
C1070563										
C1070564										
C1070565										
C1070566										
C1070567										
C1070568										

(Continued)

TABLE 6—NOMINAL AND LRFD DESIGN STRENGTHS OF HELICAL PILE LEAD SECTIONS BY CATALOG NUMBER[1,2] (CONTINUED)

Catalog Number	Nominal Tension Strength (kips)	Design Tension Strength (kips)	Nominal & LRFD Design Compression Strengths (kips)							
			Firm Soil				Soft Soil			
			Fixed		Pinned		Fixed		Pinned	
			Nominal	Design	Nominal	Design	Nominal	Design	Nominal	Design
RS2875.276 Helical Pile Lead Sections[3]										
T1071312	97.9	73.4	92.9 (89.8)	83.6 (80.8)	86.3 (80.8)	77.70 (72.8)	73.9 (64.6)	66.5 (58.2)	55.2 (42.4)	49.7 (38.2)
C2788210										
C2788002										
C2788001										
C2788221	93.0									
C2788222	97.9									
C2788007										
C2788003										
C2788009										
C2788004										
C2788005										
C2788006										
C2788179										
RS2875.203 Helical Pile Lead Sections[3]										
C2784509	74.4	66.0	68.3 (68.3)	61.5 (61.5)	68.3 (68.3)	61.5 (61.5)	66.6 (56.0)	59.9 (50.4)	46.7 (33.2)	42.0 (29.9)
C2784511										
C2784514										
C2784506										
C2784507										
C2784764										
C2784765										
C2784766										
C2784767										
C2784768										
C2784769										
C2784770										
C2784771										
C2784772										
C2784773										
C2784774										
C2784775										
C2784776										
RS4500 Helical Pile Lead Sections[3]										
C1070917	140.9	105.7	180.2 (180.2)	135.2 (135.2)	180.2 (180.2)	135.2 (135.2)	175.3 (166.3)	135.2 (135.2)	156.3 (141.0)	135.2 (126.9)
C1070976										
C1072703										
C1071995										
C1072377			191.7 (189.2)	145.3 (145.3)	186.3 (181.6)	145.3 (145.3)	175.3 (166.3)	145.3 (145.3)	156.3 (141.0)	140.7 (126.9)
C1071799										
C1070889										
C1070943										
C1070890										
C1070892										

For **SI:** 1 kip = 4.448 kN.

[1]Refer to Section 4.1.3 of this report for descriptions of fixed condition, pinned condition, soft soil and firm soil. The helical pile must be fully embedded in soft or firm soil.

[2]Strength ratings in the table include an allowance for corrosion over a 50-year service life for galvanized materials and presume the supported structure is braced in accordance with IBC Section 1810.2.2. The 50-year service life allowance for nongalvanized (bare steel) SS5 and SS175 Helical Pile Lead Sections results in helical pile lead shaft strengths equal to 94% of their strength values for the galvanized case.

[3]Values in parenthesis are for use in Seismic Design Categories D, E, and F.

[4]When catalog numbers for SS5 and SS175 lead sections end with “NG”, it indicates that the product is nongalvanized (bare steel).

ICC-ES® Most Widely Accepted and Trusted

TABLE 7—ASD ALLOWABLE STRENGTHS AND MAXIMUM INSTALLATION TORQUES OF HELICAL PILE LEAD SECTIONS BY CATALOG NUMBER[1,2]

Catalog Number	Allowable Tension Strength (kips)	Maximum Installation Torque (lb-ft)	ASD Allowable Compression Strengths (kips)			
			Firm Soil		Soft Soil	
			Fixed	Pinned	Fixed	Pinned
SS5 Helical Pile Lead Sections[4]						
C1500001	28.7	5,700	28.7	28.7	16.0	8.1
C1500002	28.7		28.7	28.7		
C1500003	23.8		23.8	23.8		
C1500004	22.1		22.1	22.1		
C1500005	27.1		27.1	27.1		
C1500006	35.0		52.5	32.6		
C1500007	35.0		53.8	32.6		
C1500031	35.0		52.5	32.6		
C1500051	35.0		45.9	32.6		
C1500058	23.8		23.8	23.8		
C1500156	28.7		28.7	28.7		
C1500160	35.0		52.5	32.6		
C1500161	35.0		45.9	32.6		
C1500242	22.1		22.1	22.1		
C1500243	27.1		27.1	27.1		
C1500397	35.0		53.8	32.6		
C1500398	35.0		53.8	32.6		
C1500489	35.0		53.8	32.6		
C1500531	22.1		22.1	22.1		
C15000070302	35.0		49.2	32.6		
T1100607	35.0		53.8	32.6		
T1100676	28.7		28.7	28.7		
T1100677	23.8		23.8	23.8		
T1100678	22.1		22.1	22.1		
T1100720	35.0		52.5	32.6		
SS175 Helical Pile Lead Sections[4]						
C1100227	50.0	10,500	60.0	60.0	30.2	15.4
C1100235	50.0		60.0	60.0		
C1100247	50.0		60.0	60.0		
C1100505	50.0		60.0	60.0		
C1500010	34.0		34.0	34.0		
C1500011	33.1		33.1	33.1		
C1500012	50.0		60.0	60.0		
C1500093	50.0		60.0	60.0		
C1500179	50.0		60.0	60.0		
C1500180	50.0		60.0	60.0		
C1500181	50.0		60.0	60.0		
C1500401	50.0		60.0	60.0		
C1500402	50.0		60.0	60.0		
C1500493	50.0		60.0	60.0		
T1100674	50.0		60.0	60.0		
T1100730	50.0		51.8	51.8		
T1100853	50.0		60.0	60.0		
RS3500 Helical Pile Lead Sections[3]						
T1071315	57.4	12,500	76.6 (75.0)	73.0 (69.9)	65.9 (60.3)	54.3 (45.6)
C1071629						
T1070813						
C1500021						
C1500022						
C1500023						
C1500024						
T1070812						
C1070563						
C1070564						
C1070565						
C1070566						
C1070567						
C1070568						

(Continued)

TABLE 7—ASD ALLOWABLE STRENGTHS AND MAXIMUM INSTALLATION TORQUES OF HELICAL PILE LEAD SECTIONS BY CATALOG NUMBER[1,2] (CONTINUED)

Catalog Number	Allowable Tension Strength (kips)	Maximum Installation Torque (lb-ft)	ASD Allowable Compression Strengths (kips)			
			Firm Soil		Soft Soil	
			Fixed	Pinned	Fixed	Pinned
RS2875.276 Helical Pile Lead Sections[3]						
T1071312	48.9	8,900	55.6 (53.8)	51.7 (48.4)	44.3 (38.7)	33.0 (25.4)
C2788210						
C2788002			47.3 (47.3)	47.3 (47.3)		
C2788001						
C2788221	46.5		46.5 (46.5)	46.5 (46.5)		
C2788222	48.9		50.2 (50.2)	50.2 (48.4)		
C2788007			55.6 (53.8)	51.7 (48.4)		
C2788003						
C2788009						
C2788004						
C2788005						
C2788006						
C2788179						
RS2875.203 Helical Pile Lead Sections[3]						
C2784509	44.0	6,710	41.0 (41.0)	41.0 (41.0)	39.9 (33.5)	28.0 (19.9)
C2784511						
C2784514						
C2784506						
C2784507						
C2784764						
C2784765						
C2784766						
C2784767						
C2784768						
C2784769						
C2784770						
C2784771						
C2784772						
C2784773						
C2784774						
C2784775						
C2784776						
RS4500 Helical Pile Lead Sections[3]						
C1070917	70.5	24,320	90.1 (90.1)	90.1 (90.1)	90.1 (90.1)	90.1 (84.4)
C1070976						
C1072703						
C1071995						
C1072377			96.9 (96.9)	96.9 (96.9)	96.9 (96.9)	93.6 (84.4)
C1071799						
C1070889						
C1070943						
C1070890						
C1070892						

For **SI:** 1 kip = 4.448 kN, 1lbf-ft = 1.356 N-m.

[1]Refer to Section 4.1.3 of this report for descriptions of fixed condition, pinned condition, soft soil and firm soil. The helical pile must be fully embedded in soft or firm soil.

[2]Strength ratings include an allowance for corrosion over a 50-year service life for galvanized materials and presume the supported structure is braced in accordance with IBC Section 1810.2.2. The 50-year service life allowance for nongalvanized (bare steel) SS5 and SS175 Helical Pile Lead Sections results in helical pile lead shaft strengths equal to 94% of their strength values for the galvanized case.

[3]Values in parenthesis are for use in Seismic Design Categories D, E, and F.

[4]When catalog numbers for SS5 and SS175 lead sections end with “NG”, it indicates that the product is nongalvanized (bare steel).

TABLE 8—NOMINAL AND LRFD DESIGN STRENGTHS OF HELICAL PILE EXTENSION SECTIONS BY MODEL[1,2]

Pile Model	Nominal Tension Strength (kips)	Design Tension Strength (kips)	Nominal & LRFD Design Compression Strengths (kips)							
			Firm Soil				Soft Soil			
			Fixed		Pinned		Fixed		Pinned	
			Nominal	Design	Nominal	Design	Nominal	Design	Nominal	Design
SS5[4]	70.0	52.5	89.8	80.8	54.4	48.9	26.6	24.0	13.6	12.2
SS175[4]	99.8	75.0	100	90	100	90	50.5	45.4	25.8	23.2
RS2875.203[3]	74.4	66.0	68.3 (68.3)	61.5 (65.3)	68.3 (68.3)	61.5 (65.3)	66.6 (56.0)	59.9 (50.4)	46.7 (33.2)	42.0 (29.9)
RS2875.276[3]	97.9	73.4	92.9 (89.8)	83.6 (80.8)	86.3 (80.8)	77.7 (72.8)	73.9 (64.6)	66.5 (58.2)	55.2 (42.4)	49.7 (38.2)
RS3500[3]	100	86.1	128.0 (125.2)	115.2 (112.7)	121.9 (116.7)	109.7 (105.1)	110.0 (100.7)	99.0 (90.6)	90.7 (76.2)	81.6 (68.6)
RS4500[3]	140.9	105.7	191.7 (189.2)	145.3 (145.3)	186.3 (181.6)	145.3 (145.3)	175.3 (166.3)	145.3 (145.3)	156.3 (141.0)	140.7 (126.9)

For **SI:** 1 kip = 4.448 kN.

[1]Refer to Section 4.1.3 of this report for descriptions of fixed condition, pinned condition, soft soil and firm soil. The helical pile must be fully embedded in soft or firm soil.

[2]Strength ratings include an allowance for corrosion over a 50-year service life for galvanized materials and presume the supported structure is braced in accordance with IBC Section 1810.2.2, and the lead section with which the extension is used will provide sufficient helix capacity to develop the full shaft capacity. The 50-year service life allowance for nongalvanized (bare steel) SS5 and SS175 Helical Pile Extension Sections results in helical pile extension section strengths equal to 94% of their strength values for the galvanized case.

[3]Values in parenthesis are for use in Seismic Design Categories D, E, and F.

[4]When catalog numbers for SS5 and SS175 extension sections end with "NG", it indicates that the product is nongalvanized (bare steel).

TABLE 9—ASD ALLOWABLE STRENGTHS OF HELICAL PILE EXTENSION SECTIONS BY MODEL[1,2]

Pile Model	Allowable Tension Strength (kips)	Maximum Installation Torque (lb-ft)	ASD Allowable Axial Compression Strength (kips)			
			Firm Soil		Soft Soil	
			Fixed	Pinned	Fixed	Pinned
SS5[4]	35.0	5,700	53.8	32.6	16.0	8.1
SS175[4]	50.0	10,500	60.0	60.0	30.2	15.4
RS2875.203[3]	44.0	6,710	41.0 (41.0)	41.0 (41.0)	39.9 (33.5)	28.0 (19.9)
RS2875.276[3]	48.9	8,900	55.6 (53.8)	51.7 (48.4)	44.3 (38.7)	33.0 (25.4)
RS3500[3]	57.4	12,500	76.6 (75.0)	73.0 (69.9)	65.9 (60.3)	54.3 (45.6)
RS4500[3]	70.5	24,320	96.9 (96.9)	96.9 (96.9)	96.9 (96.9)	93.6 (84.4)

For **SI:** 1 kip = 4.448 kN, 1lbf-ft = 1.356 N-m.

[1]Refer to Sections 4.1.3 of this report for descriptions of fixed condition, pinned condition, soft soil and firm soil. The helical pile must be fully embedded in soft or firm soil.

[2]Strength ratings include an allowance for corrosion over a 50-year service life for galvanized materials and presume the supported structure is braced in accordance with IBC Section 1810.2.2, and the lead section with which the extension is used will provide sufficient helix capacity to develop the full shaft capacity. The 50-year service life allowance for nongalvanized (bare steel) SS5 and SS175 Helical Pile Extension Sections results in helical pile extension section strengths equal to 94% of their strength values for the galvanized case.

[3]Values in parenthesis are for use in Seismic Design Categories D, E, and F.

[4]When catalog numbers for SS5 and SS175 extension sections end with "NG", it indicates that the product is nongalvanized (bare steel).

TABLE 9A—NOMINAL, LRFD DESIGN AND ASD ALLOWABLE STRENGTHS OF C1500895 TRANSITION ADAPTER IN A SS175/RS3500 COMBO PILE LOADED IN TENSION AND COMPRESSION[1,2,3]

Catalog Number	Pile Model	Maximum Installation Torque (lb-ft)	Nominal, LRFD Design and ASD Allowable Strengths in Tension & Compression (kips)					
			Nominal Tension Strength	Design Tension Strength	Allowable Tension Strength	Nominal Compression Strength	Design Compression Strength	Allowable Compression Strength
C1500895	SS175/ RS3500	10,500	99.8	75.0	50.0	100	82.1	54.7

For **SI:** 1 inch = 25.4 mm, 1 kip = 4.448 kN.

[1]Strength ratings include an allowance for corrosion over a 50-year service life for galvanized materials.

[2]Capacities apply to the specific transition adapter used in a coupling between a SS175 lead section and a RS3500 extension section.

[3]In accordance with Section 4.1.3 of this report, the lowest capacity of all components in a shaft, including lead section, extension section(s), coupling(s) and transition adaptor(s), must be used as the shaft capacity.

TABLE 10—NOMINAL STRENGTHS OF REMEDIAL REPAIR BRACKETS[1,2,3,4]

Bracket Catalog Number	T-Pipe Catalog Number	Pile Model	Nominal Strength in Axial Compression (kips)					
			2500 psi Concrete[5]		3000 psi Concrete[5]		4000 psi Concrete[5]	
			Firm Soil	Soft Soil	Firm Soil	Soft Soil	Firm Soil	Soft Soil
C1500121[6]	C1500486[6]	SS5[6]	36.3	26.6	36.3	26.6	36.3	26.6
C1500121[6]	C1500487[6]	SS5[6]	70.3	26.6	77.8	26.6	89.8	26.6
C1500299[6]	C1500488[6]	SS175[6]	79.0	50.5	89.4	50.5	99.0	50.5
C1500147[6]	C1500474[6]	SS175[6]	100	50.5	100	50.5	100	50.5
C1500738[6]	Incl w/ Brkt[6]	SS5[6]	79.4	25.9	79.4	25.9	79.4	25.9
C1500121	C2780001	RS2875.203	38.8	38.8	38.8	38.8	38.8	38.8
C1500121	C2780002	RS2875.203	73.8	66.1	77.8	66.1	77.8	66.1
C1500840	Incl w/ Brkt	RS2875.203	80.7	63.0	80.7	63.0	80.7	63.0
C1500121	C2788012	RS2875.276	38.8	38.8	38.8	38.8	38.8	38.8
C1500121	C2788011	RS2875.276	75.1	70.0	83.4	73.9	83.4	73.9
C1500840	Incl w/ Brkt	RS2875.276	85.1	70.2	85.1	70.2	85.1	70.2
C1500147	C1500475	RS3500	100	100	100	100	100	100
C1500841	Incl w/ Brkt	RS3500	100	95.3	100	100	100	100

For **SI:** 1 kip = 4.448 Kn; 1 psi=6.9 kPa.

[1]Refer to Section 4.1.3 of this report for descriptions of fixed condition, pinned condition, soft soil and firm soil.
[2]Strength ratings include an allowance for corrosion over a 50-year service life for galvanized materials and presume the supported structure is braced in accordance with IBC Section 1810.2.2. The 50-year service life allowance for nongalvanized (bare steel) remedial repair brackets in SS5 and SS175 Helical Pile systems results in remedial repair bracket strengths equal to 90% of their strength values for the galvanized case (except 82% of the strength for C1500147 and C1500738).
[3]Strength ratings apply to the specific bracket, T-pipe and anchor/pile models listed.
[4]See Section 4.1.2 of this report for applicable limit states that must be evaluated by a registered design professional.
[5]Refer to the specified compressive strength of concrete at 28 days [minimum of 24 MPa is required under ADIBC Appendix L, Section 5.1.1].
[6]When catalog numbers end with “NG”, it indicates that the product is nongalvanized (bare steel).

TABLE 11—LRFD DESIGN STRENGTHS OF REMEDIAL REPAIR BRACKETS[1,2,3,4]

Bracket Catalog Number	T-Pipe Catalog Number	Pile Model	LRFD Design Strength in Axial Compression (kips)					
			2500 psi Concrete[5]		3000 psi Concrete[5]		4000 psi Concrete[5]	
			Firm Soil	Soft Soil	Firm Soil	Soft Soil	Firm Soil	Soft Soil
C1500121[6]	C1500486[6]	SS5[6]	32.6	24.0	32.6	24.0	32.6	24.0
C1500121[6]	C1500487[6]	SS5[6]	49.2	24.0	54.4	24.0	62.8	24.0
C1500299[6]	C1500488[6]	SS175[6]	55.3	42.9	62.6	45.4	74.2	45.4
C1500147[6]	C1500474[6]	SS175[6]	86.7	45.4	86.7	45.4	90	45.4
C1500738[6]	Incl w/ Brkt[6]	SS5[6]	71.4	23.3	71.4	23.3	71.4	23.3
C1500121	C2780001	RS2875.203	34.9	34.9	34.9	34.9	34.9	34.9
C1500121	C2780002	RS2875.203	51.6	46.3	54.5	46.3	54.5	53.3
C1500840	Incl w/ Brkt	RS2875.203	72.6	56.7	72.6	56.7	72.6	56.7
C1500121	C2788012	RS2875.276	34.9	34.9	34.9	34.9	34.9	34.9
C1500121	C2788011	RS2875.276	52.6	49.0	58.4	51.7	58.4	53.3
C1500840	Incl w/ Brkt	RS2875.276	76.6	63.1	76.6	63.1	76.6	63.1
C1500147	C1500475	RS3500	71.8	71.8	77	77	77	77
C1500841	Incl w/ Brkt	RS3500	85.8	85.8	90	90	90	90

For **SI:** 1 kip = 4.448 kN; 1 psi=6.9 kPa.

[1]Refer to Section 4.1.3 of this report for descriptions of fixed condition, pinned condition, soft soil and firm soil.
[2]Strength ratings include an allowance for corrosion over a 50-year service life for galvanized materials and presume the supported structure is braced in accordance with IBC Section 1810.2.2. The 50-year service life allowance for nongalvanized (bare steel) remedial repair brackets in SS5 and SS175 Helical Pile systems results in remedial repair bracket strengths equal to 90% of their strength values for the galvanized case (except 82% of the strength for C1500147 and C1500738).
[3]Strength ratings apply to the specific bracket, T-pipe and anchor/pile models listed.
[4]See Section 4.1.2 of this report for applicable limit states that must be evaluated by a registered design professional.
[5]Refer to the specified compressive strength of concrete at 28 days [minimum of 24 MPa is required under ADIBC Appendix L, Section 5.1.1].
[6]When catalog numbers end with “NG”, it indicated that the product is nongalvanized (bare steel).

TABLE 12—ASD ALLOWABLE STRENGTHS OF REMEDIAL REPAIR BRACKETS[1,2,3,4]

Bracket Catalog Number	T-Pipe Catalog Number	Pile Model	ASD Allowable Strength in Axial Compression (kips)					
			2500 psi Concrete[5]		3000 psi Concrete[5]		4000 psi Concrete[5]	
			Firm Soil	Soft Soil	Firm Soil	Soft Soil	Firm Soil	Soft Soil
C1500121[6]	C1500486[6]	SS5[6]	21.7	16.0	21.7	16.0	21.7	16.0
C1500121[6]	C1500487[6]	SS5[6]	30.9	16.0	34.2	16.0	39.4	16.0
C1500299[6]	C1500488[6]	SS175[6]	34.7	27.7	39.3	27.7	47.9	30.2
C1500147[6]	C1500474[6]	SS175[6]	54.4	30.2	54.4	30.2	60.0	30.2
C1500738[6]	Incl w/ Brkt[6]	SS5[6]	47.5	15.5	47.5	15.5	47.5	15.5
C1500121	C2780001	RS2875.203	23.2	23.2	23.2	23.2	23.2	23.2
C1500121	C2780002	RS2875.203	32.4	29.0	34.2	29.0	34.3	34.3
C1500840	Incl w/ Brkt	RS2875.203	48.3	37.7	48.3	37.7	48.3	37.7
C1500121	C2788012	RS2875.276	23.2	23.2	23.2	23.2	23.2	23.2
C1500121	C2788011	RS2875.276	33.0	30.8	36.6	32.5	36.6	34.3
C1500840	Incl w/ Brkt	RS2875.276	51.0	42.0	51.0	42.0	51.0	42.0
C1500147	C1500475	RS3500	45.1	45.1	51.3	51.3	51.3	51.3
C1500841	Incl w/ Brkt	RS3500	60	60.0	60	60	60	60

For **SI:** 1 kip = 4.448 kN; 1 psi=6.9 kPa.

[1]Refer to Section 4.1.3 of this report for descriptions of fixed condition, pinned condition, soft soil and firm soil

[2]Strength ratings include an allowance for corrosion over a 50-year service life for galvanized materials and presume the supported structure is braced in accordance with IBC Section 1810.2.2. The 50-year service life allowance for nongalvanized (bare steel) remedial repair brackets in SS5 and SS175 Helical Pile systems results in remedial repair bracket strengths equal to 90% of their strength values for the galvanized case (except 82% of the strength for C1500147 and C1500738).

[3]Strength ratings apply to the specific bracket, T-pipe and anchor/pile models listed.

[4]See Section 4.1.2 of this report for applicable limit states that must be evaluated by a registered design professional.

[5]Refer to the specified compressive strength of concrete at 28 days [minimum of 24 MPa is required under ADIBC Appendix L, Section 5.1.1].

[6]When catalog numbers end with "NG", it indicates that the product is nongalvanized (bare steel).

TABLE 13—NOMINAL STRENGTHS OF NEW CONSTRUCTION PILE CAPS LOADED IN COMPRESSION[1,2,3,4,5,7,8]

Catalog Number	Pile Model	Nominal Compression Strength (kips)											
		2500 psi Concrete[6]				3000 psi Concrete[6]				4000 psi Concrete[6]			
		Firm Soil		Soft Soil		Firm Soil		Soft Soil		Firm Soil		Soft Soil	
		Pinned	Fixed	Pinned	Fixed	Pinned	Fixed	Pinned	Fixed	Pinned	Fixed	Pinned	Fixed
C1500458G[9]	SS5	54.4	60.0	13.6	26.6	54.4	62.3	13.6	26.6	54.4	66.9	13.6	26.6
C1500459G[9]	SS175	100.0	100.0	25.8	50.5	100.0	100.0	25.8	50.5	100.0	100.0	25.8	50.5
C1500465G[9]	SS5	54.4	60.0	13.6	26.6	54.4	62.3	13.6	26.6	54.4	66.9	13.6	26.6
C1500467G[9]	SS175	100.0	100.0	25.8	50.5	100.0	100.0	25.8	50.5	100.0	100.0	25.8	50.5
C1500781G C1500797G	RS2875.203[7]	71.5 (71.5)	71.5 (71.5)	45.2 (33.2)	66.1 (56.0)	80.1 (73.9)	80.1 (80.1)	45.2 (33.2)	66.1 (56.0)	80.1 (73.9)	87.1 (84.2)	45.2 (33.2)	66.1 (56.0)
C1500781G C1500797G	RS2875.276[7]	71.5 (71.5)	71.5 (71.5)	55.2 (42.4)	71.5 (64.6)	80.1 (80.1)	80.1 (80.1)	55.2 (42.4)	73.9 (64.6)	86.3 (80.8)	92.9 (89.8)	55.2 (42.4)	73.9 (64.6)
C1501356G C1501357G	RS3500[7]	121.9 (116.7)	128.0 (125.2)	90.7 (76.2)	110.0 (100.7)	121.9 (116.7)	128.0 (125.2)	90.7 (76.2)	110.0 (100.7)	121.9 (116.7)	128.0 (125.2)	90.7 (76.2)	110.0 (100.7)
C1072726G C1072727G	RS4500[7]	166.1 (166.1)	166.1 (166.1)	156.3 (141.0)	166.1 (166.1)	186.2 (181.6)	186.2 (186.2)	156.3 (141.0)	175.3 (166.3)	186.3 (181.6)	191.7 (189.2)	156.3 (141.0)	175.3 (166.3)
C1500777G[9] C1500793G[9]	SS5	72.0	72.0	13.6	26.6	72.0	72.0	13.6	26.6	72.0	72.0	13.6	26.6
C1500778G[9] C1500794G[9]	SS175	128.9	128.9	25.8	50.5	128.9	128.9	25.8	50.5	128.9	128.9	25.8	50.5

For **SI:** 1 inch = 25.4 mm, 1 kip = 4.448 kN, 1lbf-ft = 1.356 N-m; 1 psi=6.9 kPa.

[1]Refer to Section 4.1.3 of this report for descriptions of fixed condition, pinned condition, soft soil and firm soil.

[2]Strength ratings include allowance for corrosion of zinc-coated new construction pile caps over a 50-year service life for galvanized materials and presume the supported structure is braced in accordance with IBC Section 1810.2.2. The 50-year service life allowance for nongalvanized (bare steel) new construction pile caps in SS5 and SS175 Helical Pile systems results in new construction pile caps compression strengths equal to 90% of their strength values for the galvanized case.

[3]Capacities apply to the specific pile cap and pile models listed.

[4]The fixed end condition requires that the foundation itself be fixed and that pile and pile cap be embedded in the foundation with adequate concrete cover and reinforcing to resist 56.4 kip-in, 116 kip-in, 71.66 kip-in, 138.3 kip-in, 138.3 kip-in and 263.72 kip-in nominal bending moment for SS5, SS175, RS2875 (including RS2875.203 and RS2875.276), RS3500, RS3500/SS175 combo and RS4500 pile models, respectively. The center of shaft must be at least 6-in away from the end/corner of the concrete footing.

[5]See Section 4.1.2 of this report for applicable limit states that must be evaluated by a registered design professional.

[6]Refer to the specified compressive strength of concrete at 28 days [minimum of 24 MPa is required under ADIBC Appendix L, Section 5.1.1].

[7]Values in parenthesis are for use in Seismic Design Categories D, E, and F.

[8]The concrete footing design and reinforcement design, including the concrete thickness above the new construction pile cap must be determined by a registered design professional.

[9]Nongalvanzied (bare steel) new construction pile caps do not include "G" in the end of their catalog number.

TABLE 14—LRFD DESIGN STRENGTHS OF NEW CONSTRUCTION PILE CAPS LOADED IN COMPRESSION[1,2,3,4,5,7,8]

Catalog Number	Pile Model	LRFD Design Compression Strength (kips)											
		2500 psi Concrete[6]				3000 psi Concrete[6]				4000 psi Concrete[6]			
		Firm Soil		Soft Soil		Firm Soil		Soft Soil		Firm Soil		Soft Soil	
		Pinned	Fixed	Pinned	Fixed	Pinned	Fixed	Pinned	Fixed	Pinned	Fixed	Pinned	Fixed
C1500458G[9]	SS5	48.9	50.6	12.2	24.0	48.9	52.0	12.2	24.0	48.9	54.7	12.2	24.0
C1500459G[9]	SS175	79.2	79.2	23.2	45.4	90.0	90.0	23.2	45.4	90.0	90.0	23.2	45.4
C1500465G[9]	SS5	48.9	50.6	12.2	24.0	48.9	52.0	12.2	24.0	48.9	54.7	12.2	24.0
C1500467G[9]	SS175	79.2	79.2	23.2	45.4	90.0	90.0	23.2	45.4	90.0	90.0	23.2	45.4
C1500781(G C1500797G	RS2875.203[7]	58.9 (58.9)	58.9 (58.9)	41.4 (29.9)	58.9 (50.4)	65.0 (65.0)	65.0 (65.0)	41.4 (29.9)	59.5 (50.4)	65.3 (65.3)	65.3 (65.3)	41.4 (29.9)	59.5 (50.4)
C1500781G C1500797G	RS2875.276[7]	58.9 (58.9)	58.9 (58.9)	49.7 (38.2)	58.9 (58.2)	65.0 (65.0)	65.0 (65.0)	49.7 (38.2)	65.0 (58.2)	76.3 (72.8)	76.3 (76.3)	49.7 (38.2)	66.5 (58.2)
C1501356G C1501357G	RS3500[7]	108.8 (105.1)	108.8 (108.8)	81.6 (68.6)	99.0 (90.6)	109.7 (105.1)	115.2 (112.7)	81.6 (68.6)	99.0 (90.6)	109.7 (105.1)	115.2 (112.7)	81.6 (68.6)	99.0 (90.6)
C1072726G C1072727G	RS4500[7]	130.4 (130.4)	130.4 (130.4)	130.4 (126.9)	130.4 (130.4)	142.4 (142.4)	142.4 (142.4)	140.7 (126.9)	142.4 (142.4)	145.3 (145.3)	145.3 (145.3)	140.7 (126.9)	145.3 (145.3)
C1500777G[9] C1500793G[9]	SS5	54.0	54.0	12.2	24.0	54.0	54.0	12.2	24.0	54.0	54.0	12.2	24.0
C1500778G[9] C1500794G[9]	SS175	96.7	96.7	23.2	45.4	96.7	96.7	23.2	45.4	96.7	96.7	23.2	45.4

For **SI:** 1 inch = 25.4 mm, 1 kip = 4.448 kN, 1lbf-ft = 1.356 N-m; 1 psi=6.9 kPa.

[1]Refer to Section 4.1.3 of this report for descriptions of fixed condition, pinned condition, soft soil and firm soil.
[2]Strength ratings include allowance for corrosion of zinc-coated new construction pile caps over a 50-year service life for galvanized materials and presume the supported structure is braced in accordance with IBC Section 1810.2.2. The 50-year service life allowance for nongalvanized (bare steel) new construction pile caps in SS5 and SS175 Helical Pile systems results in new construction pile caps compression strengths equal to 90% of their strength values for the galvanized case.
[3]Capacities apply to the specific pile cap and pile models listed.
[4]The fixed end condition requires that the foundation itself be fixed and that pile and pile cap be embedded in the foundation with adequate concrete cover and reinforcing to resist 56.4 kip-in, 116 kip-in, 71.66 kip-in, 138.3 kip-in, 138.3 kip-in and 263.72 kip-in nominal bending moment for SS5, SS175, RS2875 (including RS2875.203 and RS2875.276), RS3500, RS3500/SS175 combo and RS4500 pile models, respectively. The center of shaft must be at least 6-in away from the end/corner of the concrete footing.
[5]See Section 4.1.2 of this report for applicable limit states that must be evaluated by a registered design professional.
[6]Refer to the specified compressive strength of concrete at 28 days [minimum of 24 MPa is required under ADIBC Appendix L, Section 5.1.1].
[7]Values in parenthesis are for use in Seismic Design Categories D, E, and F.
[8]The concrete footing design and reinforcement design, including the concrete thickness above the new construction pile cap must be determined by a registered design professional.
[9]Nongalvanzied (bare steel) new construction pile caps do not include “G” in the end of their catalog number.

TABLE 15—ASD ALLOWABLE STRENGTHS OF NEW CONSTRUCTION PILE CAPS LOADED IN COMPRESSION[1,2,3,4,5,8]

Catalog Number	Pile Model	ASD Allowable Compression Strength (kips)											
		2500 psi Concrete[6]				3000 psi Concrete[6]				4000 psi Concrete[6]			
		Firm Soil		Soft Soil		Firm Soil		Soft Soil		Firm Soil		Soft Soil	
		Pinned	Fixed	Pinned	Fixed	Pinned	Fixed	Pinned	Fixed	Pinned	Fixed	Pinned	Fixed
C1500458G[9]	SS5	32.6	33.7	8.1	16.0	32.6	34.6	8.1	16.0	32.6	36.4	8.1	16.0
C1500459G[9]	SS175	52.7	52.7	15.4	30.2	60.0	60.0	15.4	30.2	60.0	60.0	15.4	30.2
C1500465G[9]	SS5	32.6	33.7	8.1	16.0	32.6	34.6	8.1	16.0	32.6	36.4	8.1	16.0
C1500467G[9]	SS175	52.7	52.7	15.4	30.2	60.0	60.0	15.4	30.2	60.0	60.0	15.4	30.2
C1500781G	RS2875.203[7]	37.6	37.6	27.5	37.6	41.8	41.8	27.5	39.6	43.5	43.5	27.5	39.6
C1500797G		(37.6)	(37.6)	(19.9)	(33.5)	(41.8)	(41.8)	(19.9)	(33.5)	(43.5)	(43.5)	(19.9)	(33.5)
C1500781G	RS2875.276[7]	37.6	37.6	33.0	37.6	41.8	41.8	33.0	41.8	49.5	49.5	33.0	44.3
C1500797G		(37.6)	(37.6)	(25.4)	(37.6)	(41.8)	(41.8)	(25.4)	(38.7)	(48.4)	(49.5)	(25.4)	(38.7)
C1501356G	RS3500[7]	68.7	68.7	54.3	65.9	73.0	75.9	54.3	65.9	73.0	76.6	54.3	65.9
C1501357G		(68.7)	(68.7)	(45.6)	(60.3)	(69.9)	(75.0)	(45.6)	(60.3)	(69.9)	(75.0)	(45.6)	(60.3)
C1072726G	RS4500[7]	88.7	88.7	88.7	88.7	96.9	96.9	93.6	96.9	96.9	96.9	93.6	96.9
C1072727G		(88.7)	(88.7)	(84.4)	(88.7)	(96.9)	(96.9)	(84.4)	(96.9)	(96.9)	(96.9)	(84.4)	(96.9)
C1500777G[9]	SS5	36.0	36.0	8.1	16.0	36.0	36.0	8.1	16.0	36.0	36.0	8.1	16.0
C1500793G[9]													
C1500778G[9]	SS175	64.4	64.4	15.4	30.2	64.4	64.4	15.4	30.2	64.4	64.4	15.4	30.2
C1500794G[9]													

For **SI:** 1 inch = 25.4 mm, 1 kip = 4.448 kN, 1lbf-ft = 1.356 N-m; 1 psi=6.9 kPa.

[1]Refer to Section 4.1.3 of this report for descriptions of fixed condition, pinned condition, soft soil and firm soil.
[2]Strength ratings include an allowance for corrosion of zinc-coated steel new construction pile caps over a 50-year service life for galvanized materials and presume the supported structure is braced in accordance with IBC Section 1810.2.2. The 50-year service life allowance for nongalvanized (bare steel) new construction pile caps in SS5 and SS175 Helical Pile systems results in new construction pile caps compression strengths equal to 90% of their strength values for the galvanized case.
[3]Capacities apply to the specific pile cap and pile models listed.
[4]The fixed end condition requires that the foundation itself be fixed and that pile and pile cap be embedded in the foundation with adequate concrete cover and reinforcing to resist 56.4 kip-in, 116 kip-in, 71.66 kip-in, 138.3 kip-in, 138.3 kip-in and 263.72 kip-in nominal bending moment for SS5, SS175, RS2875 (including RS2875.203 and RS2875.276), RS3500, RS3500/SS175 combo and RS4500 pile models, respectively. The center of shaft must be at least 6-in away from the end/corner of the concrete footing.
[5]See Section 4.1.2 of this report for applicable limit states that must be evaluated by a registered design professional.
[6]Refer to the specified compressive strength of concrete at 28 days [minimum of 24 MPa is required under ADIBC Appendix L, Section 5.1.1].
[7]Values in parenthesis are for use in Seismic Design Categories D, E, and F.
[8]The concrete footing design and reinforcement design must be determined by a registered design professional. The punching shear in concrete from the new construction pile cap may control the capacity.
[9]Nongalvanzied (bare steel) new construction pile caps do not include “G” in the end of their catalog number.

TABLE 16—NOMINAL, LRFD DESIGN AND ASD ALLOWABLE STRENGTHS OF NEW CONSTRUCTION PILE CAPS LOADED IN TENSION[1,2,3,4,5,6]

Catalog Number	Pile Model	Nominal, LRFD Design and ASD Allowable Strengths in Tension (kips)		
		Nominal Tensile Strength	LRFD Design Tensile Strength	ASD Allowable Tensile Strength
C1500465G[8]	SS5	56.2	42.1	28.1
C1500467G[8]	SS175	78.9	59.2	39.5
C1500797G	RS2875.203[7]	87.0	65.3	43.5
C1500797G	RS2875.276[7]	95.0	70.4	47.5
C1501357G	RS3500[7]	100	76.9	51.9
C1072727G	RS4500[7]	140.9	105.7	70.5
C1500793G[8]	SS5	45.2	33.9	22.6
C1500794G[8]	SS175	60.8	45.6	30.4

For **SI:** 1 inch = 25.4 mm, 1 kip = 4.448 kN; 1 psi=6.9 kPa.

[1]Refer to Section 4.1.3 of this report for descriptions of fixed condition, pinned condition, soft soil and firm soil.
[2]Strength ratings include an allowance for corrosion of zinc-coated steel new construction pile caps over a 50-year service life for galvanized materials. The 50-year service life allowance for nongalvanized (bare steel) new construction pile caps in SS5 and SS175 Helical Pile systems results in new construction pile caps tension strengths equal to 90% of their strength values for the galvanized case.
[3]Capacities apply to the specific pile cap and pile models listed.
[4]See Sections 4.1.2 and 5.7 of this report for applicable limit states that must be evaluated by a registered design professional.
[5]The specified compressive strength of concrete at 28 days must not be less than 2,500 psi (17.2 MPa) [minimum of 24 MPa is required under ADIBC Appendix L, Section 5.1.1].
[6]The concrete footing design, reinforcement design, and anchorage capacity between bracket and concrete must be determined by a registered design professional. The bracket anchorage with concrete may control the capacity.
[7]Anchorage design must comply with the requirements of Section 1810.3.11.2 of the IBC for SDC D through F.
[8]Nongalvanzied (bare steel) new construction pile caps do not include “G” in the end of their catalog number.

TABLE 17—FORCES APPLIED BY REMEDIAL REPAIR BRACKETS TO FOUNDATIONS OF 2500 PSI CONCRETE ON FIRM SOIL AT ALLOWABLE LOAD LEVELS[1,2,3]

Bracket Catalog Number	T-Pipe Catalog Number	Pile Model	Forces Applied by Brackets to Foundations (kips) & their Positions (in) (see Figure 9)						
			F (kips)	Q (kips)	L (in)	TB (kips)	H1 (in)	P (kips)	H2 (in)
C1500121	C1500486	SS5	8.7	21.7	0.89	4.0	4.00	11.2	6.50
C1500121	C1500487	SS5	9.3	30.9	0.96	4.9	4.00	12.6	6.50
C1500299	C1500488	SS175	9.3	34.7	0.96	4.9	4.00	12.6	6.50
C1500147	C1500474	SS175	17.6	54.4	1.46	5.8	4.12	20.3	9.00
C1500121	C2780001	RS2875.203	9.3	23.2	0.94	4.8	4.0	12.5	6.5
C1500121	C2780002	RS2875.203	9.3	32.4	0.96	4.9	4.0	12.6	6.5
C1500121	C2788012	RS2875.276	9.3	23.2	0.94	4.8	4.0	12.5	6.5
C1500121	C2788011	RS2875.276	9.3	33.0	0.96	4.9	4.0	12.6	6.5
C1500147	C1500475	RS3500	17.6	45.1	1.46	5.8	4.12	20.3	9.00
C1500738	Incl w/ Brkt	SS5	4.0	47.5	2.49	0.00	5.00	3.8	6.63
C1500840	Incl w/ Brkt	RS2875.203	4.4	48.3	1.75	0.0	5.0	4.2	6.63
C1500840	Incl w/ Brkt	RS2875.276	5.8	51.0	1.75	0.0	5.0	5.6	6.63
C1500841	Incl w/ Brkt	RS3500	10.1	60.0	2.90	0.0	5.00	9.8	6.63

For **SI:** 1 inch = 25.4 mm, 1 kip = 4.448 kN; 1 psi=6.9 kPa.

[1]Refer to Section 4.1.3 of this report for descriptions of soft soil and firm soil.
[2]Design assumption described in Figure 9 must be verified by a registered design professional.
[3]Refer to the specified compressive strength of concrete at 28 days [minimum of 24 MPa is required under ADIBC Appendix L, Section 5.1.1].

TABLE 18—FORCES APPLIED BY REMEDIAL REPAIR BRACKETS TO FOUNDATIONS OF 3000 PSI CONCRETE ON FIRM SOIL AT ALLOWABLE LOAD LEVELS[1,2,3]

Bracket Catalog Number	T-Pipe Catalog Number	Pile Model	Forces Applied by Brackets to Foundations (kips) & their Positions (in) (see Figure 9)						
			F (kips)	Q (kips)	L (in)	TB (kips)	H1 (in)	P (kips)	H2 (in)
C1500121	C1500486	SS5	8.7	21.7	0.74	2.7	4.00	9.9	6.50
C1500121	C1500487	SS5	10.8	34.2	0.93	5.4	4.00	14.3	6.50
C1500299	C1500488	SS175	10.8	39.3	0.93	5.4	4.00	14.3	6.50
C1500147	C1500474	SS175	20.6	54.4	1.42	6.3	4.12	23.3	9.00
C1500121	C2780001	RS2875.203	9.3	23.2	0.79	3.4	4.0	11.0	6.5
C1500121	C2780002	RS2875.203	10.8	34.2	0.93	5.4	4.0	14.3	6.5
C1500121	C2788012	RS2875.276	9.3	23.2	0.78	3.4	4.0	11.0	6.5
C1500121	C2788011	RS2875.276	10.8	36.6	0.92	5.4	4.0	14.3	6.5
C1500147	C1500475	RS3500	20.5	51.3	1.42	6.3	4.12	23.2	9.00
C1500738	Incl w/ Brkt	SS5	4.0	47.5	2.49	0.0	5.00	3.8	6.63
C1500840	Incl w/ Brkt	RS2875.203	1.56	48.3	2.14	0.0	5.0	1.37	6.63
C1500840	Incl w/ Brkt	RS2875.276	2.7	51.0	2.24	0.0	5.0	2.5	6.63
C1500841	Incl w/ Brkt	RS3500	12.9	71.2	2.86	0.0	5.00	12.6	6.63

For **SI:** 1 inch = 25.4 mm, 1 kip = 4.448 kN; 1 psi=6.9 kPa.

[1]Refer to Section 4.1.3 of this report for descriptions of soft soil and firm soil.
[2]Design assumption described in Figure 9 must be verified by a registered design professional.
[3]Refer to the specified compressive strength of concrete at 28 days [minimum of 24 MPa is required under ADIBC Appendix L, Section 5.1.1].

TABLE 19—FORCES APPLIED BY REMEDIAL REPAIR BRACKETS TO FOUNDATIONS OF 4000 PSI CONCRETE ON FIRM SOIL AT ALLOWABLE LOAD LEVELS[1,2,3]

Bracket Catalog Number	T-Pipe Catalog Number	Pile Model	Forces Applied by Brackets to Foundations (kips) & their Positions (in) (see Figure 9)						
			F (kips)	Q (kips)	L (in)	TB (kips)	H1 (in)	P (kips)	H2 (in)
C1500121	C1500486	SS5	8.7	21.7	0.56	1.1	4.00	8.3	6.50
C1500121	C1500487	SS5	13.7	39.4	0.88	6.2	4.00	17.5	6.50
C1500299	C1500488	SS175	13.7	47.9	0.88	6.2	4.00	17.5	6.50
C1500147	C1500474	SS175	24.0	60.0	1.24	5.2	4.12	25.0	9.00
C1500121	C2780001	RS2875.203	9.3	23.2	0.60	1.5	4.0	9.2	6.5
C1500121	C2780002	RS2875.203	13.7	34.3	0.88	6.2	4.0	17.5	6.5
C1500121	C2788012	RS2875.276	9.3	23.2	0.60	1.5	4.0	9.2	6.5
C1500121	C2788011	RS2875.276	13.7	36.6	0.88	6.2	4.0	17.5	6.5
C1500147	C1500475	RS3500	20.5	51.3	1.06	2.50	4.12	19.5	9.0
C1500738	Incl w/ Brkt	SS5	4.0	47.5	2.49	0.0	5.00	3.8	6.63
C1500840	Incl w/ Brkt	RS2875.203	0.18	48.3	1.75	0.0	5.0	0.0	6.63
C1500840	Incl w/ Brkt	RS2875.276	0.0	51.0	1.75	0.0	5.0	0.0	6.63
C1500841	Incl w/ Brkt	RS3500	6.7	71.2	2.27	0.0	5.00	6.5	6.63

For **SI:** 1 inch = 25.4 mm, 1 kip = 4.448 kN; 1 psi=6.9 kPa.

[1]Refer to Section 4.1.3 of this report for descriptions of soft soil and firm soil.
[2]Design assumption described in Figure 9 must be verified by a registered design professional.
[3]Refer to the specified compressive strength of concrete at 28 days [minimum of 24 MPa is required under ADIBC Appendix L, Section 5.1.1].

TABLE 20—FORCES APPLIED BY REMEDIAL REPAIR BRACKETS TO FOUNDATIONS OF 2500 PSI CONCRETE ON SOFT SOIL AT ALLOWABLE LOAD LEVELS[1,2,3]

Bracket Catalog Number	T-Pipe Catalog Number	Pile Model	Forces Applied by Brackets to Foundations (kips) & their Positions (in) (see Figure 9)						
			F (kips)	Q (kips)	L (in)	TB (kips)	H1 (in)	P (kips)	H2 (in)
C1500121	C1500486	SS5	6.4	16.0	0.66	1.4	2.69	6.7	6.50
C1500121	C1500487	SS5	6.4	16.0	0.66	1.4	2.69	6.7	6.50
C1500299	C1500488	SS175	9.3	27.7	0.96	4.9	2.69	12.6	6.50
C1500147	C1500474	SS175	12.1	30.2	1.00	1.1	4.12	11.1	9.00
C1500121	C2780001	RS2875.203	9.3	23.2	0.95	4.8	4.0	12.5	6.5
C1500121	C2780002	RS2875.203	9.3	29.0	0.96	4.9	4.0	12.6	6.5
C1500121	C2788012	RS2875.276	9.3	23.2	0.94	4.8	4.0	12.5	6.5
C1500121	C2788011	RS2875.276	9.3	30.8	0.96	4.9	4.0	12.6	6.5
C1500147	C1500475	RS3500	17.6	45.1	1.46	5.8	4.12	20.3	9.00
C1500738	Incl w/ Brkt	SS5	0.1	15.5	1.75	0.0	5.00	0.0	6.63
C1500840	Incl w/ Brkt	RS2875.203	0.04	37.7	2.07	0.0	5.0	0.0	6.63
C1500840	Incl w/ Brkt	RS2875.276	3.2	42.0	2.26	0.0	5.0	3.1	6.63
C1500841	Incl w/ Brkt	RS3500	11.1	60.0	2.90	0.0	5.00	11.0	6.63

For **SI:** 1 inch = 25.4 mm, 1 kip = 4.448 kN, 1lbf-ft = 1.356 N-m; 1 psi=6.9 kPa.

[1]Refer to Section 4.1.3 of this report for descriptions of soft soil and firm soil.
[2]Design assumption described in Figure 9 must be verified by a registered design professional.
[3]Refer to the specified compressive strength of concrete at 28 days [minimum of 24 MPa is required under ADIBC Appendix L, Section 5.1.1].

TABLE 21—FORCES APPLIED BY REMEDIAL REPAIR BRACKETS TO FOUNDATIONS OF 3000 PSI CONCRETE ON SOFT SOIL AT ALLOWABLE LOAD LEVELS[1,2,3]

Bracket Catalog Number	T-Pipe Catalog Number	Pile Model	Forces Applied by Brackets to Foundations (kips) & their Positions (in) (see Figure 9)						
			F (kips)	Q (kips)	L (in)	TB (kips)	H1 (in)	P (kips)	H2 (in)
C1500121	C1500486	SS5	6.4	16.0	0.55	0.7	2.69	6.0	6.50
C1500121	C1500487	SS5	6.4	16.0	0.55	0.7	2.69	6.0	6.50
C1500299	C1500488	SS175	10.8	27.7	0.93	5.4	2.69	14.3	6.50
C1500147	C1500474	SS175	12.1	30.2	0.83	0.1	4.12	10.1	9.00
C1500121	C2780001	RS2875.203	9.3	23.2	0.79	3.4	4.0	11.0	6.5
C1500121	C2780002	RS2875.203	10.8	29.0	0.93	5.4	4.0	14.3	6.5
C1500121	C2788012	RS2875.276	9.3	23.2	.78	3.4	4.0	11.0	6.5
C1500121	C2788011	RS2875.276	10.8	32.5	0.92	5.4	4.0	14.3	6.5
C1500147	C1500475	RS3500	20.5	51.3	1.42	6.3	4.12	23.2	9.00
C1500738	Incl w/ Brkt	SS5	0.1	15.5	1.75	0.0	5.00	0.0	6.63
C1500840	Incl w/ Brkt	RS2875.203	0.04	37.7	1.76	0.0	5.0	0.0	6.63
C1500840	Incl w/ Brkt	RS2875.276	1.0	42.0	1.92	0.0	5.0	1.0	6.63
C1500841	Incl w/ Brkt	RS3500	10.0	62.8	2.66	0.0	5.00	9.9	6.63

For **SI:** 1 inch = 25.4 mm, 1 kip = 4.448 kN; 1 psi=6.9 kPa.

[1]Refer to Section 4.1.3 of this report for descriptions of soft soil and firm soil.
[2]Design assumption described in Figure 9 must be verified by a registered design professional.
[3]Refer to the specified compressive strength of concrete at 28 days [minimum of 24 MPa is required under ADIBC Appendix L, Section 5.1.1].

TABLE 22—FORCES APPLIED BY REMEDIAL REPAIR BRACKETS TO FOUNDATIONS OF 4000 PSI CONCRETE ON SOFT SOIL AT ALLOWABLE LOAD LEVELS[1,2,3]

Bracket Catalog Number	T-Pipe Catalog Number	Pile Model	Forces Applied by Brackets to Foundations (kips) & their Positions (in) (see Figure 9)						
			F (kips)	Q (kips)	L (in)	TB (kips)	H1 (in)	P (kips)	H2 (in)
C1500121	C1500486	SS5	6.3	16.0	0.41	0.0	2.69	5.2	6.50
C1500121	C1500487	SS5	6.3	16.0	0.41	0.0	2.69	5.2	6.50
C1500299	C1500488	SS175	12.1	30.2	0.78	4.2	2.69	14.2	6.50
C1500147	C1500474	SS175	11.4	30.2	0.63	0.0	4.12	9.3	9.00
C1500121	C2780001	RS2875.203	9.3	23.2	0.60	1.5	4.0	9.2	6.5
C1500121	C2780002	RS2875.203	11.0	34.3	0.71	3.0	4.0	12.1	6.5
C1500121	C2788012	RS2875.276	9.3	23.2	0.60	1.5	4.0	9.2	6.5
C1500121	C2788011	RS2875.276	13.2	34.3	0.84	5.5	4.0	16.4	6.5
C1500147	C1500475	RS3500	20.5	51.3	1.06	2.5	4.12	19.5	9.00
C1500738	Incl w/ Brkt	SS5	0.1	15.5	1.75	0.0	5.00	0.0	6.63
C1500840	Incl w/ Brkt	RS2875.203	0.04	37.7	1.75	0.0	5.0	0.0	6.63
C1500840	Incl w/ Brkt	RS2875.276	0.0	42.0	1.75	0.0	5.0	0.0	6.63
C1500841	Incl w/ Brkt	RS3500	10.0	62.8	2.66	0.0	5.00	9.9	6.63

For **SI:** 1 inch = 25.4 mm, 1 kip = 4.448 kN; 1 psi=6.9 kPa.

[1]Refer to Section 4.1.3 of this report for descriptions of soft soil and firm soil.
[2]Design assumption described in Figure 9 must be verified by a registered design professional.
[3]Refer to the specified compressive strength of concrete at 28 days [minimum of 24 MPa is required under ADIBC Appendix L, Section 5.1.1].

TABLE 23—ALLOWABLE LATERAL SOIL CAPACITY[1,2,3]

Pile Model	Allowable Lateral Capacity (lb)	Minimum Installation Depth (ft)
RS2875.203	1606	15
RS2875.276	1041	14.5
RS3500	1824	15
SS175/RS3500 Combo	1988	16
RS4500	3662	15

For **SI:** 1 inch = 25.4 mm, 1 kip = 4.448 kN.

[1]Installation must be in accordance with Sections 4.1.5 and 4.2 of this report.
[2]Installation is limited to piles in very stiff clay with a minimum SPT of 26 (See Section 4.1.5) and to piles are used with new construction brackets.
[3]For soil conditions other than very stiff clay, the lateral capacity of the pile must be determined by a registered design professional.

DIVISION: 31 00 00—EARTHWORK
Section: 31 63 00—Bored Piles

REPORT HOLDER:

HUBBELL POWER SYSTEMS, INC.

EVALUATION SUBJECT:

CHANCE® TYPE SS5, SS175, RS2875.203, RS2875.276, RS3500, SS175/RS3500 COMBO AND RS4500 HELICAL FOUNDATION SYSTEMS

1.0 REPORT PURPOSE AND SCOPE

Purpose:

The purpose of this evaluation report supplement is to indicate that the CHANCE Helical Foundation Systems, described in ICC-ES evaluation report ESR-2794, have also been evaluated for compliance with the code noted below as adopted by the Los Angeles Department of Building and Safety (LADBS).

Applicable code edition:

- 2023 *City of Los Angeles Building Code* (LABC)
- 2023 *City of Los Angeles Residential Code* (LARC)

2.0 CONCLUSIONS

The CHANCE Helical Foundation Systems, described in Sections 2.0 through 7.0 of the evaluation report ESR-2794, comply with the LABC Section 1810, and are subject to the conditions of use described in this supplement.

3.0 CONDITIONS OF USE

The CHANCE Helical Foundation Systems described in this evaluation report supplement must comply with all of the following conditions:

- All applicable sections in the evaluation report ESR-2794.
- The design, installation, conditions of use and identification of the helical foundation systems are in accordance with the 2021 *International Building Code*® (IBC) provisions noted in the evaluation report ESR-2794.
- The design, installation and inspection are in accordance with additional requirements of LABC Chapters 16 and 17, Sections 1803 and 1810.3.1.5, as applicable.
- The helical foundation systems may be used in new construction and resist horizontal loads as an exception to LABC Section 1810.3.1.5, provided the following conditions are followed:
  - The helical foundation system must comply with the provisions in ESR-2794 that apply to installation in Seismic Design Categories D, E and F.
  - A soil investigation report as required by LABC Section 1803.1 shall be submitted to the Los Angeles Department of Building and Safety Grading Division for review and approval for each site where helical piles are installed.
  - For installation of helical piles under LABC covered structures, axial and lateral (where used) capacities of helical piles shall be determined in accordance with LABC Section 1810.3.3 by at least two project specific preproduction tests for each soil profile, size and depth of helical pile. At least two percent of all production piles shall be proof tested to the design strength determined by using load combinations in LABC Section 1605.2.
  - For installation of helical piles under LARC covered structures, axial and lateral (where used) capacities of helical piles shall be determined in accordance with LABC Section 1810.3.3 by at least one project specific preproduction tests for each soil profile, size and depth of helical pile. At least two percent of all production piles shall be proof tested to the design strength determined by using load combinations in LABC Section 1605.2.

ICC-ES Evaluation Reports are not to be construed as representing aesthetics or any other attributes not specifically addressed, nor are they to be construed as an endorsement of the subject of the report or a recommendation for its use. There is no warranty by ICC Evaluation Service, LLC, express or implied, as to any finding or other matter in this report, or as to any product covered by the report.

Copyright © 2026 ICC Evaluation Service, LLC. All rights reserved.

- Helical piles installation shall be performed under the inspection and approval of the soil engineer and the continuous inspection and approval of the deputy grading inspector. The information recorded shall include installation equipment used, pile dimensions, tip elevations, final depth, final installation torque and other pertinent installation data as required by soils engineer.
- Helical piles shall satisfy corrosion resistance requirements of AC358. In addition, all helical piles materials that are subject to corrosion shall include at least 1/16-inch corrosion allowance.
- The allowable axial design load must comply with LABC Section 1810.3.3.1.9.
- The allowable lateral load must comply with ESR-2794. The seismic demand force must not exceed the allowabled lateral load reported in ESR-2794.

- Sections 5.2 and 5.21 of the evaluation report ESR-2794 are not applicable to this supplement.
- Under the LARC, an engineered design in accordance with LARC Section R301.1.1.3 must be submitted.

This supplement expires concurrently with the evaluation report, reissued May 2026.

DIVISION: 31 00 00—EARTHWORK
Section: 31 63 00—Bored Piles

REPORT HOLDER:

HUBBELL POWER SYSTEMS, INC.

EVALUATION SUBJECT:

CHANCE® TYPE SS5, SS175, RS2875.203, RS2875.276, RS3500, SS175/RS3500 COMBO AND RS4500 HELICAL FOUNDATION SYSTEMS

1.0 REPORT PURPOSE AND SCOPE

Purpose:

The purpose of this evaluation report supplement is to indicate that the CHANCE® TYPE RS3500 and RS4500 helical foundation systems, described in ICC-ES evaluation report ESR-2794, have also been evaluated for compliance with the Chicago Construction Code (Title 14 of the Chicago Municipal Code) as noted below.

Applicable code edition:

- 2019 *Chicago Building Code* (Title 14B)

2.0 CONCLUSIONS

In accordance with Section 1810.3.5.3.5 of Title 14B, only the CHANCE® RS3500 and RS4500 helical foundation systems, described in Sections 2.0 through 7.0 of the evaluation report ESR-2794, comply with Title 14B. These are subject to the conditions of use described in this supplement.

3.0 CONDITIONS OF USE

The CHANCE® RS3500 and RS4500 helical foundation systems described in this evaluation report supplement must comply with all of the following conditions:

- All applicable sections in the evaluation report ESR-2794.
- The design, installation, conditions of use and identification of the CHANCE® RS3500 and RS4500 helical foundation systems must be in accordance with the 2018 *International Building Code®* (IBC) provisions noted in the evaluation report ESR-2794, with the following modifications:
  1. The nominal and LRFD Design Strengths in Tables 6 and 8 of ESR-2794 for lead sections and extension sections, respectively, must be replaced with the following, for Seismic Design Categories A through E:

Pile Model	Nominal Tension Strength (kips)	Design Tension Strength (kips)	Nominal & LRFD Design Compression Strengths (kips)[1,2,3]							
			Firm Soil				Soft Soil			
			Fixed		Pinned		Fixed		Pinned	
			Nominal	Design	Nominal	Design	Nominal	Design	Nominal	Design
RS3500	80.3	60.3	55.3	49.8	55.3	49.8	55.3	49.8	55.3	49.8
RS4500	98.7	74	99.1	79.8	99.1	79.8	99.1	79.8	99.1	79.8

For **SI:** 1 kip = 4.448 kN.

[1]Refer to Section 4.1.3 of the evaluation report for descriptions of fixed condition, pinned condition, soft soil and firm soil.
[2]Strength ratings include an allowance for corrosion over a 50-year service life and presume the supported structure is braced in accordance with IBC Section 1810.2.2, and the lead section with which the extension is used will provide sufficient helix capacity to develop the full shaft capacity.
[3]Differences in design values compared to Tables 6 and 8 of ESR-2794 are due to the more restrictive allowable stress requirements of Table 1810.3.2.6 of Title 14B.

ICC-ES Evaluation Reports are not to be construed as representing aesthetics or any other attributes not specifically addressed, nor are they to be construed as an endorsement of the subject of the report or a recommendation for its use. There is no warranty by ICC Evaluation Service, LLC, express or implied, as to any finding or other matter in this report, or as to any product covered by the report.

Copyright © 2026 ICC Evaluation Service, LLC. All rights reserved.

2. The ASD Allowable Strengths in Tables 7 and 9 of ESR-2794 for lead sections and extension sections, respectively, must be replaced with the following, for Seismic Design Categories A through E:

Pile Model	Allowable Tension Strength (kips)	Maximum Installation Torque (lb-ft)	ASD Allowable Axial Compression Strength (kips)[1,2,3]			
			Firm Soil		Soft Soil	
			Fixed	Pinned	Fixed	Pinned
RS3500	40.2	12,500	33.1	33.1	33.1	33.1
RS4500[3]	49.3	24,320	53.2	53.2	53.2	53.2

For **SI:** 1 kip = 4.448 kN, 1lbf-ft = 1.356 N-m.

[1]Refer to Sections 4.1.3 of the evaluation report for descriptions of fixed condition, pinned condition, soft soil and firm soil
[2]Strength ratings include an allowance for corrosion over a 50-year service life and presume the supported structure is braced in accordance with IBC Section 1810.2.2, and the lead section with which the extension is used will provide sufficient helix capacity to develop the full shaft capacity.
[3]Differences in design values compared to Tables 7 and 9 of ESR-2794 are due to the more restrictive allowable stress requirements of Table 1810.3.2.6 of Title 14B.

3. Where Sections 2.0 through 7.0 of ESR-2794 refer to a registered design professional, this must be a registered geotechnical consultant, as defined in the Chicago Construction Codes Administrative Provisions (Title 14A).

4. Where required, a report of geotechnical investigation must be submitted as part of the documentation required by Section 14A-4-411.1 of Title 14A.

- Evaluation of helical foundation systems subjected to corrosive environment, addressed in Section 1810.3.2.5.1 of Title 14B, is outside the scope of this evaluation report supplement.
- The design, installation and inspection are in accordance with additional requirements of Chapters 16, 17, and 18 of Title 14B, as applicable.

This supplement expires concurrently with the evaluation report, reissued May 2026.